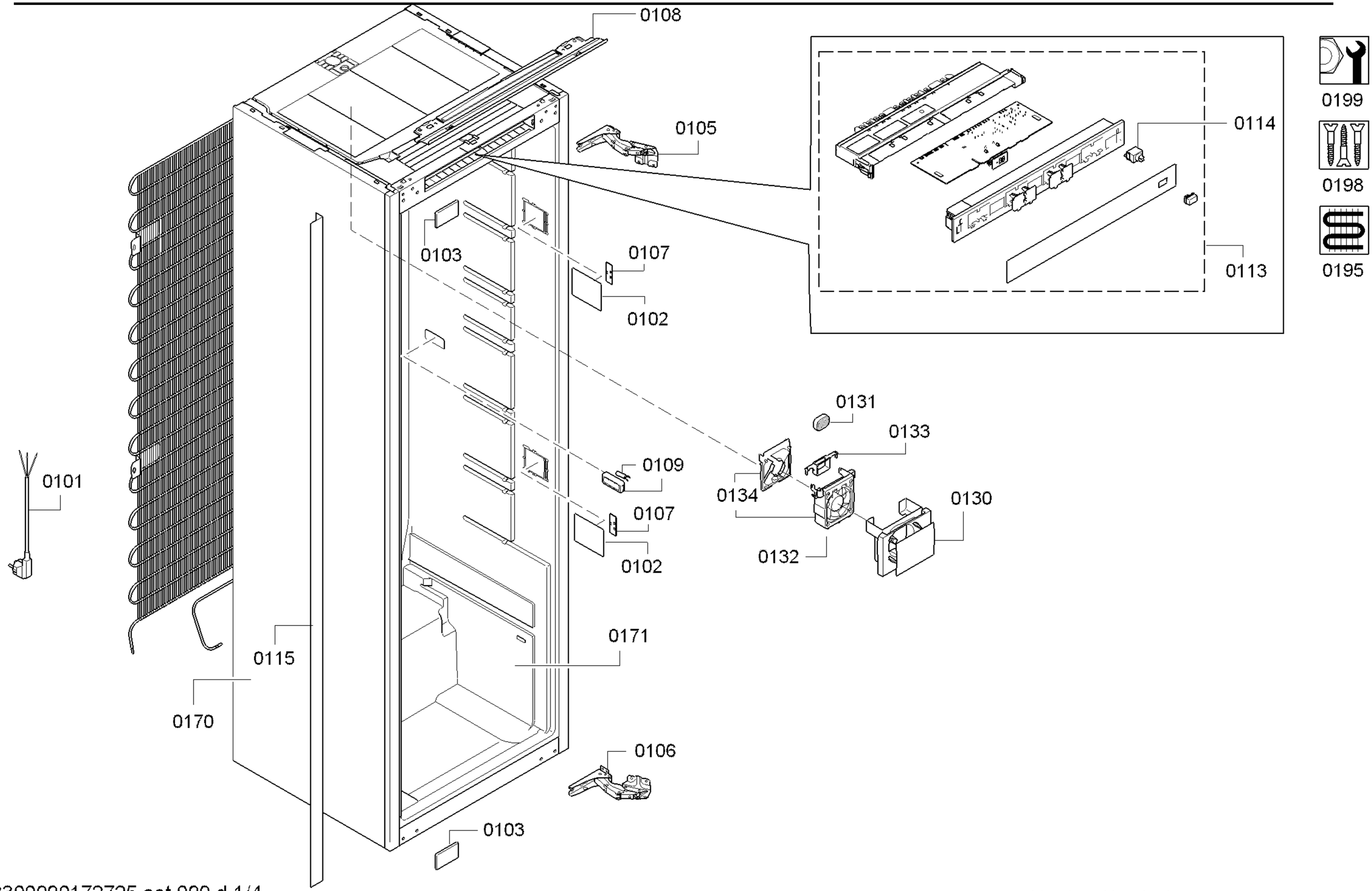

Copyright © (2021) by Balay / 205502

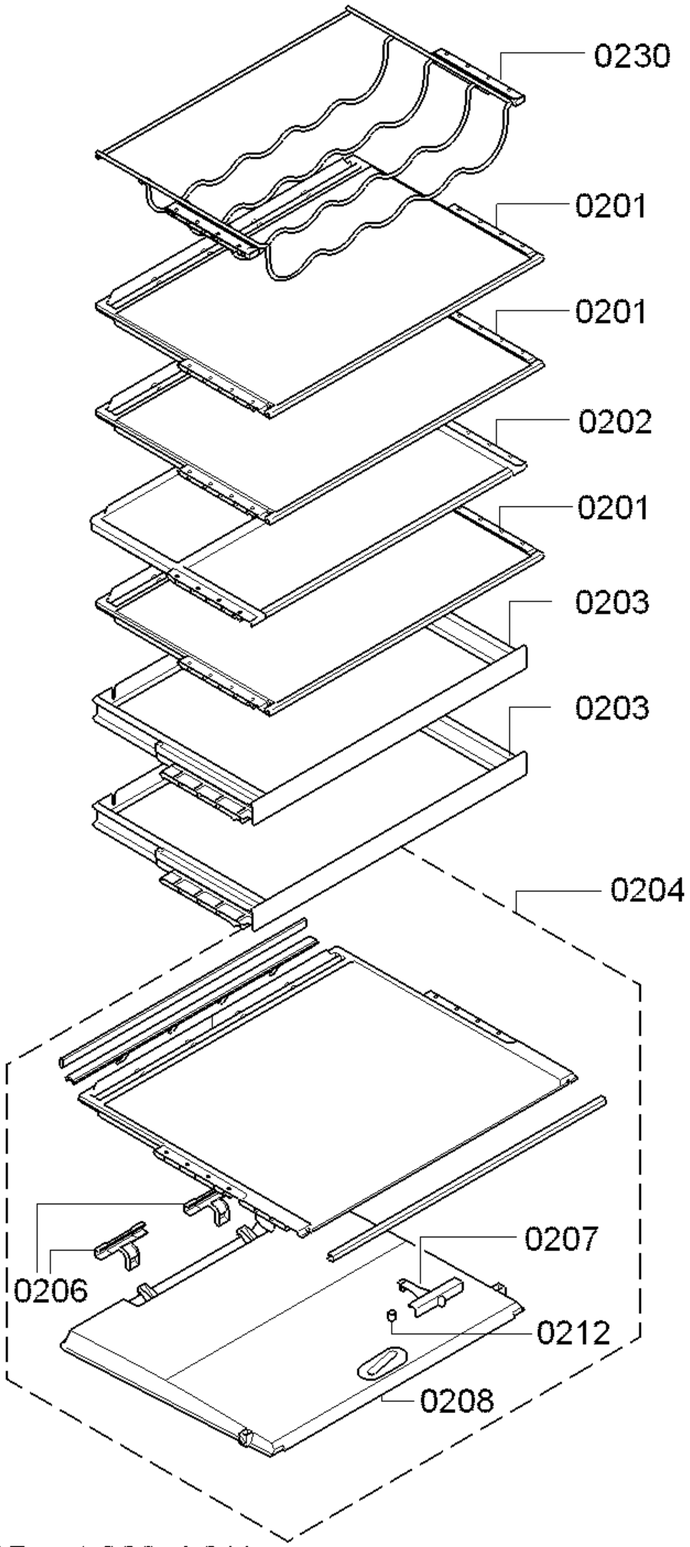

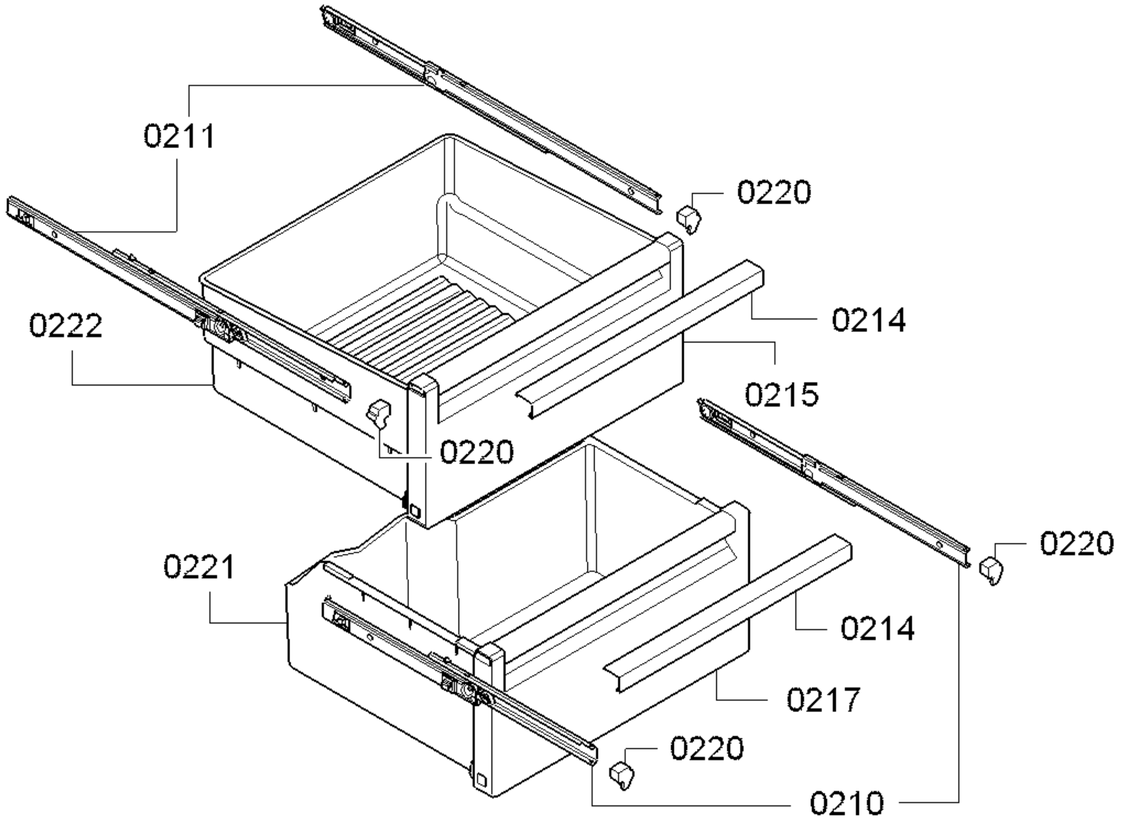

58300000172725 aet 000 d 2/4

Copyright © (2021) by Balay / 205502

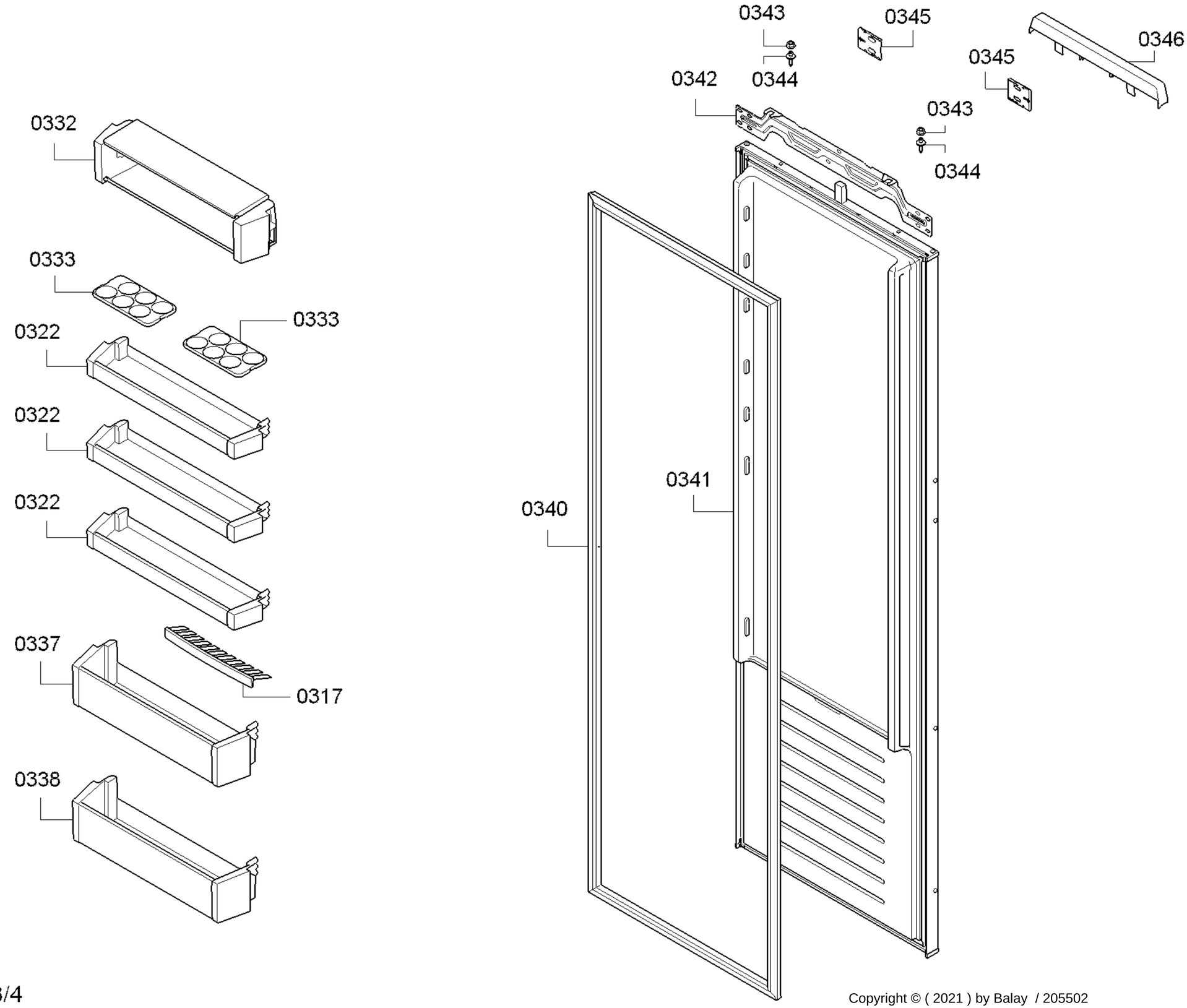

Copyright © (2021) by Balay / 205502

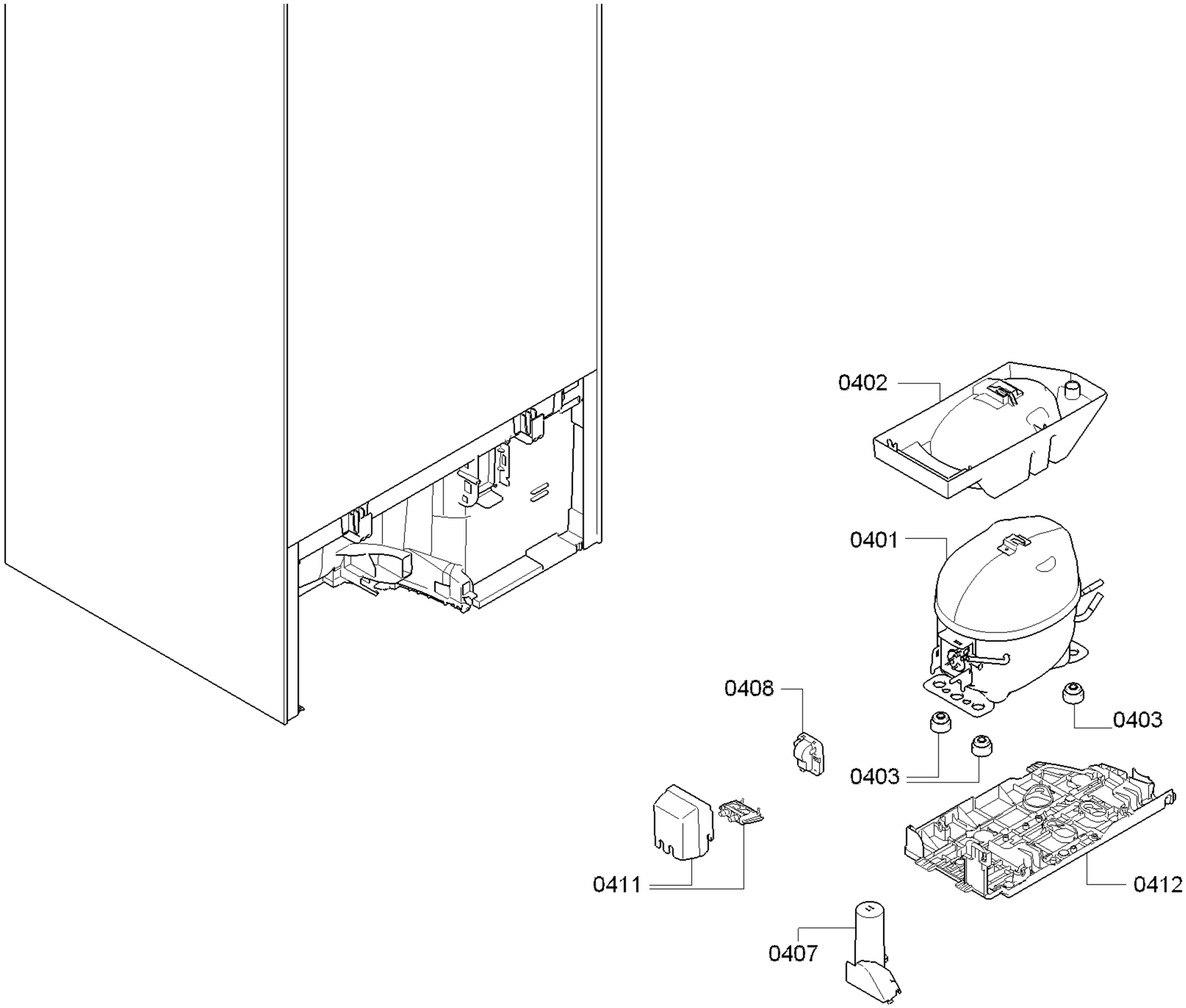

Copyright © (2021) by Balay / 205502