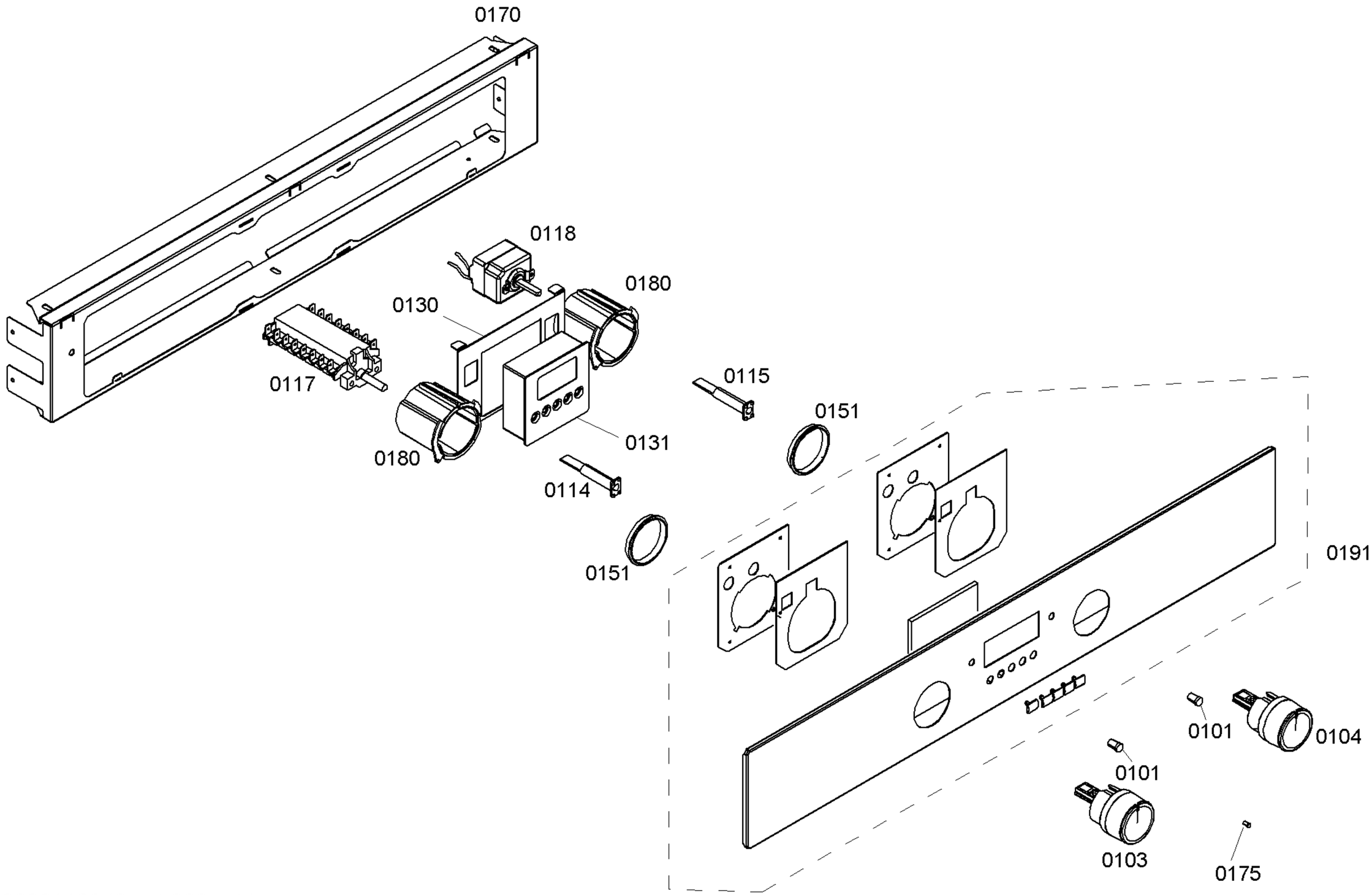

Copyright © (2020) by Balay / 205502

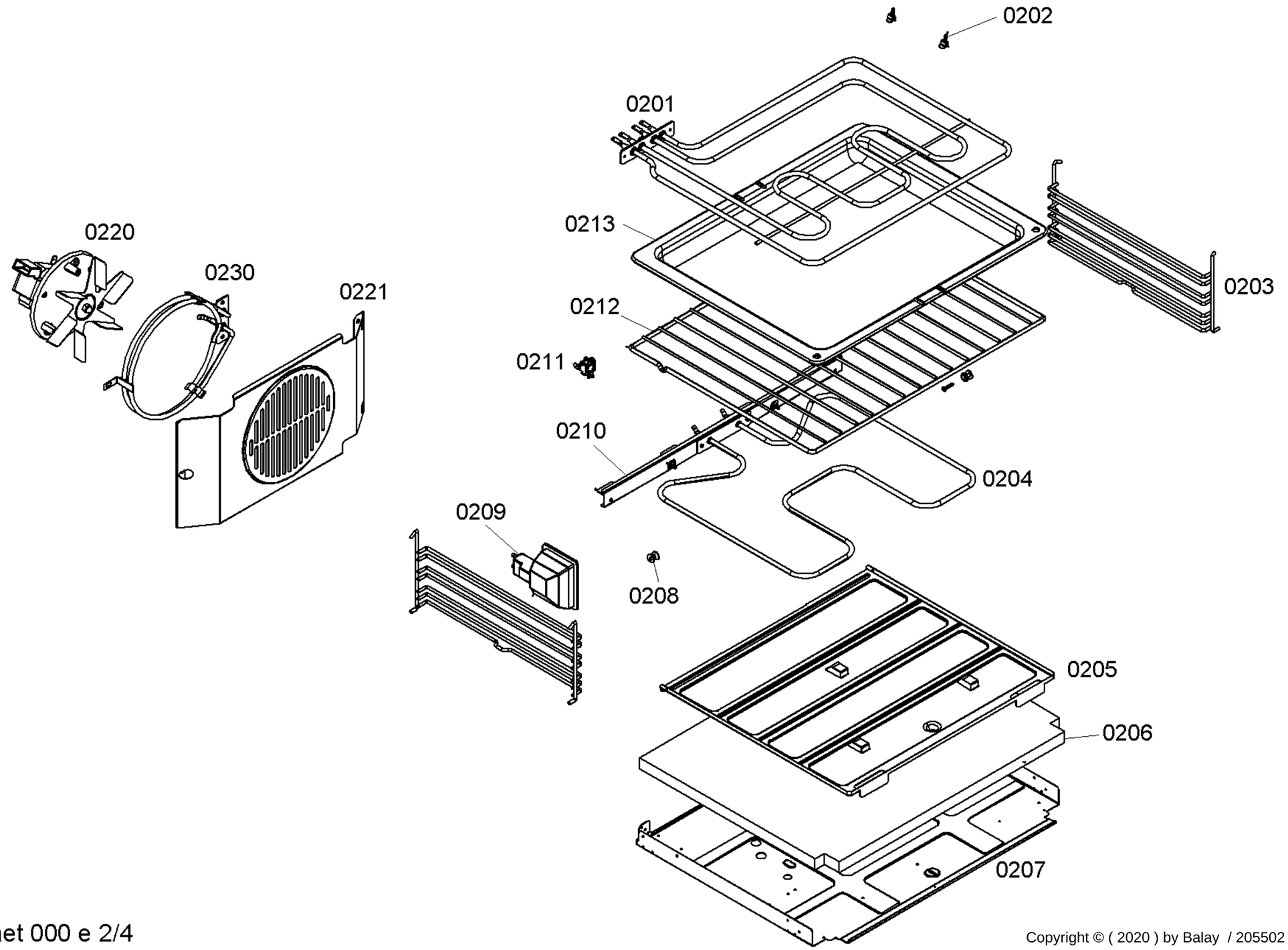

Copyright © (2020) by Balay / 205502

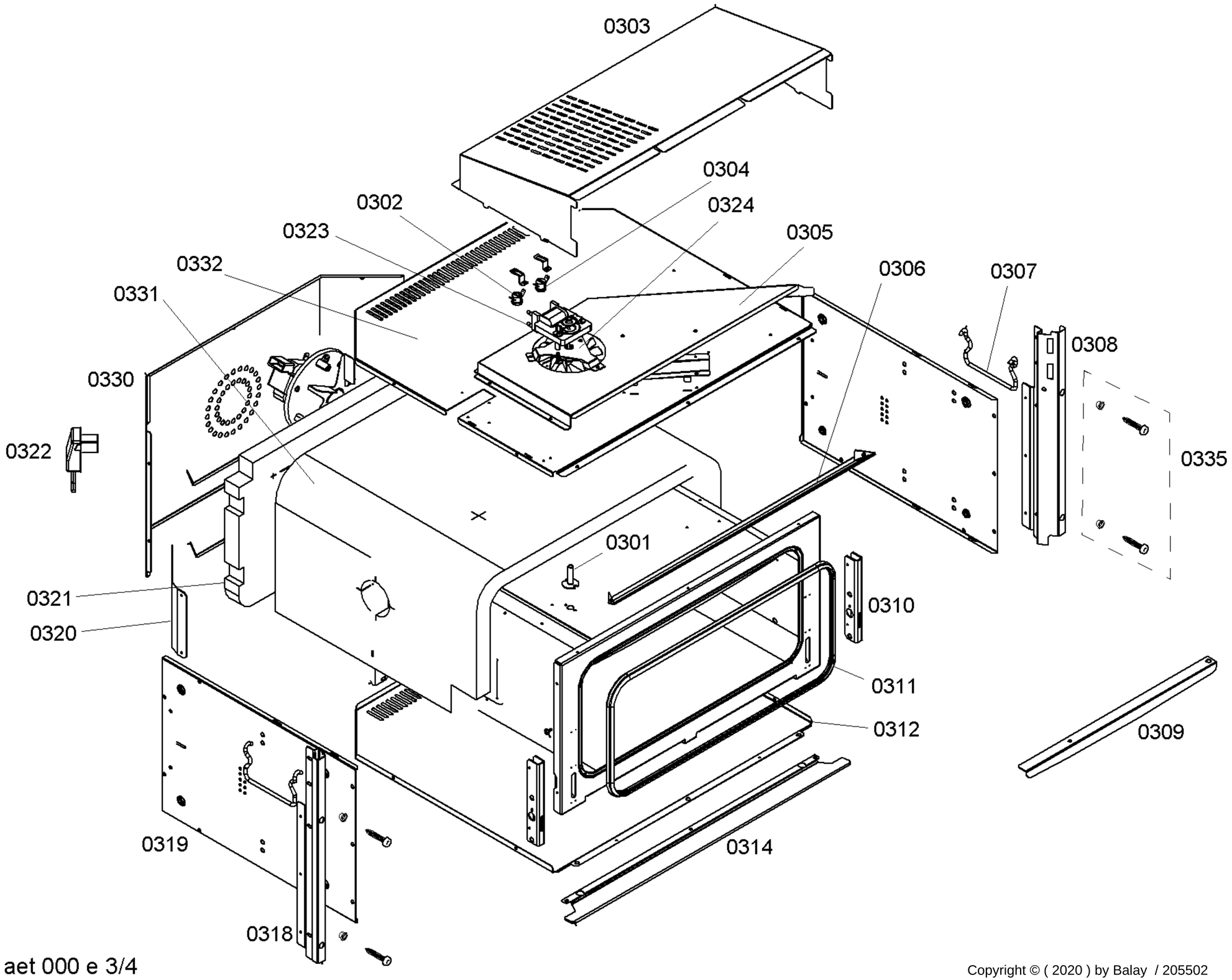

Copyright © (2020) by Balay / 205502

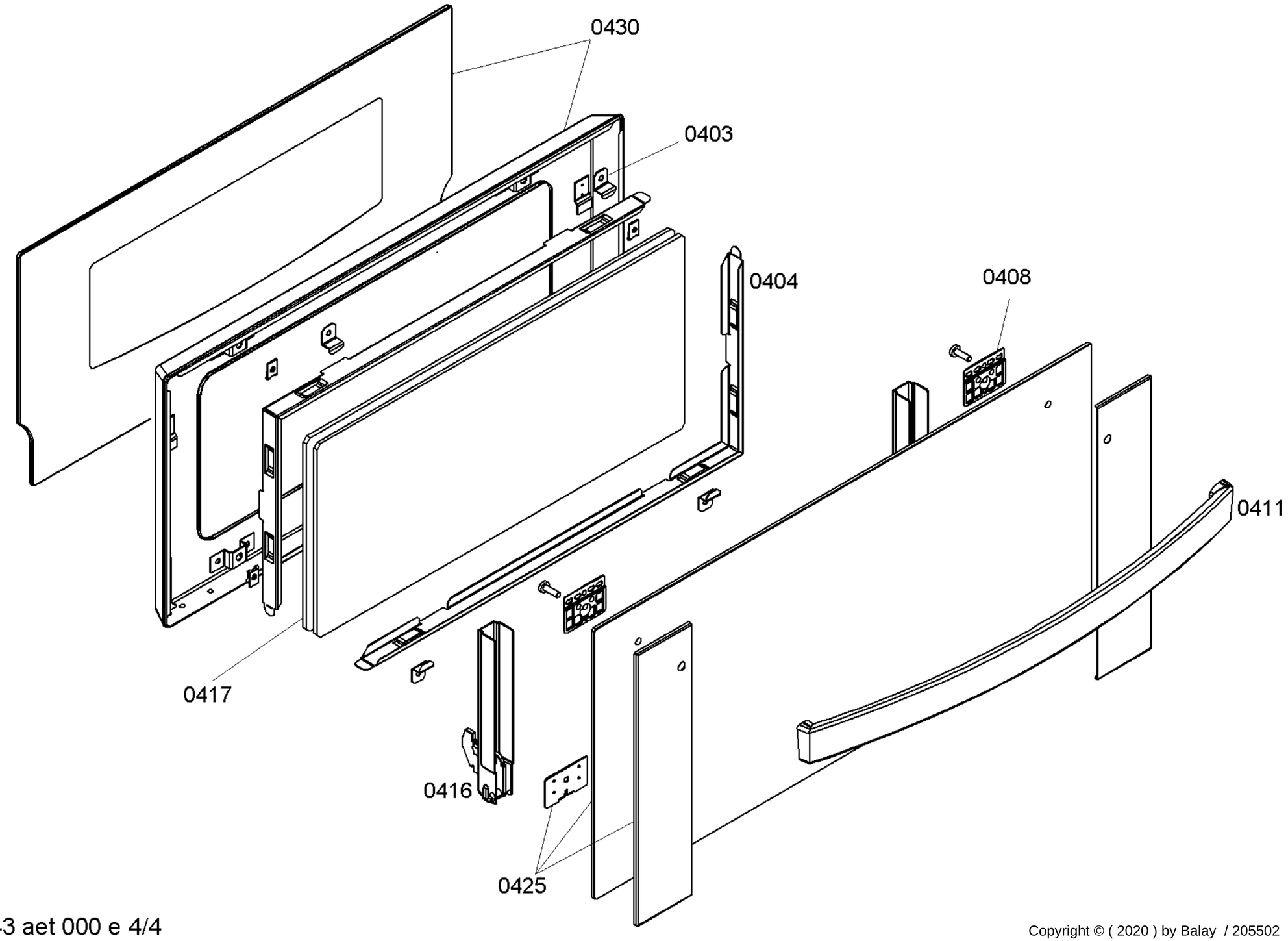

Copyright © (2020) by Balay / 205502