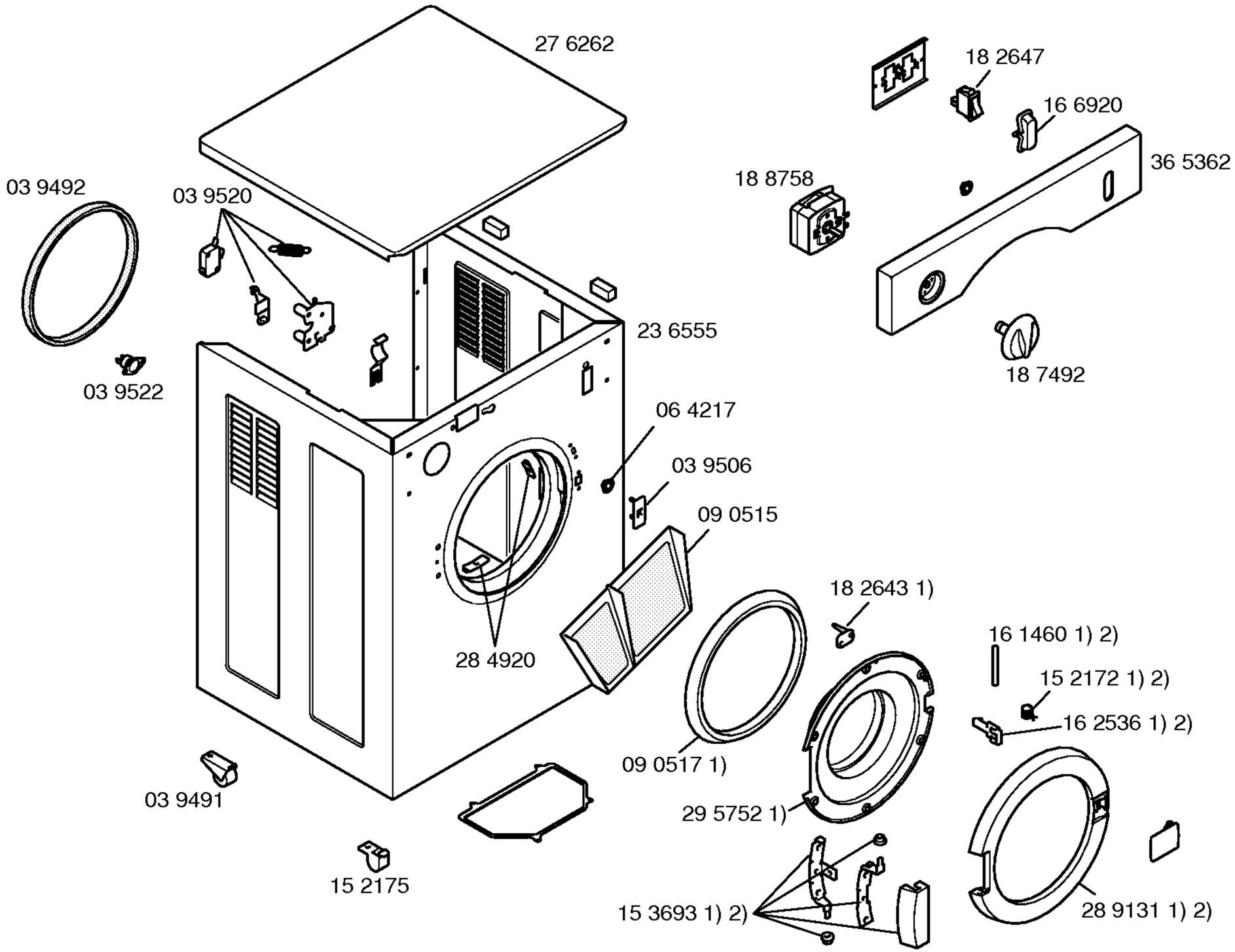

Libro de instrucciones
52 9876
(es,pt)

1) 36 1855
2) 28 8987

Copyright © (2015) by Balay / 205502

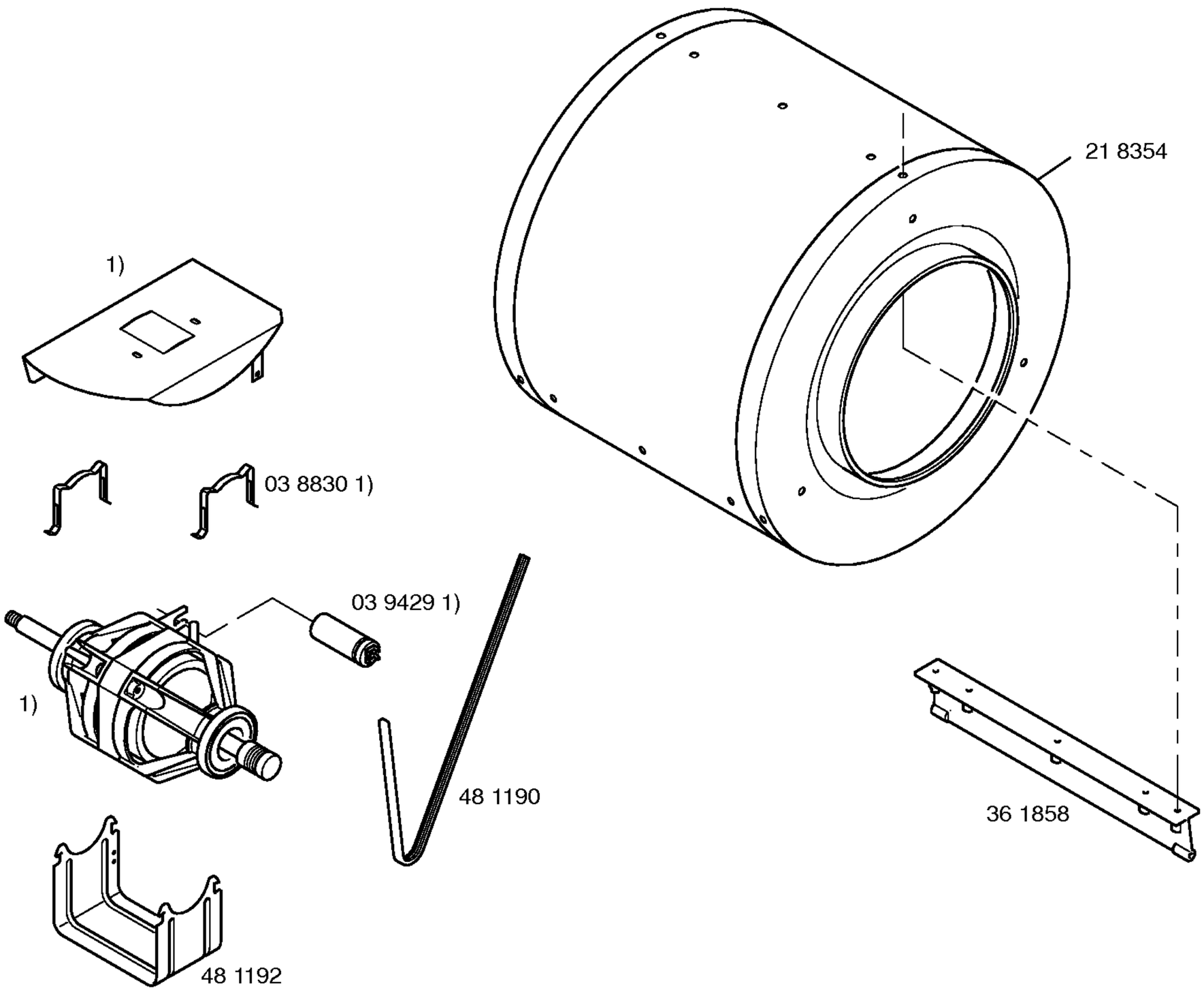

1) 14 2143
Completo

Copyright © (2015) by Balay / 205502

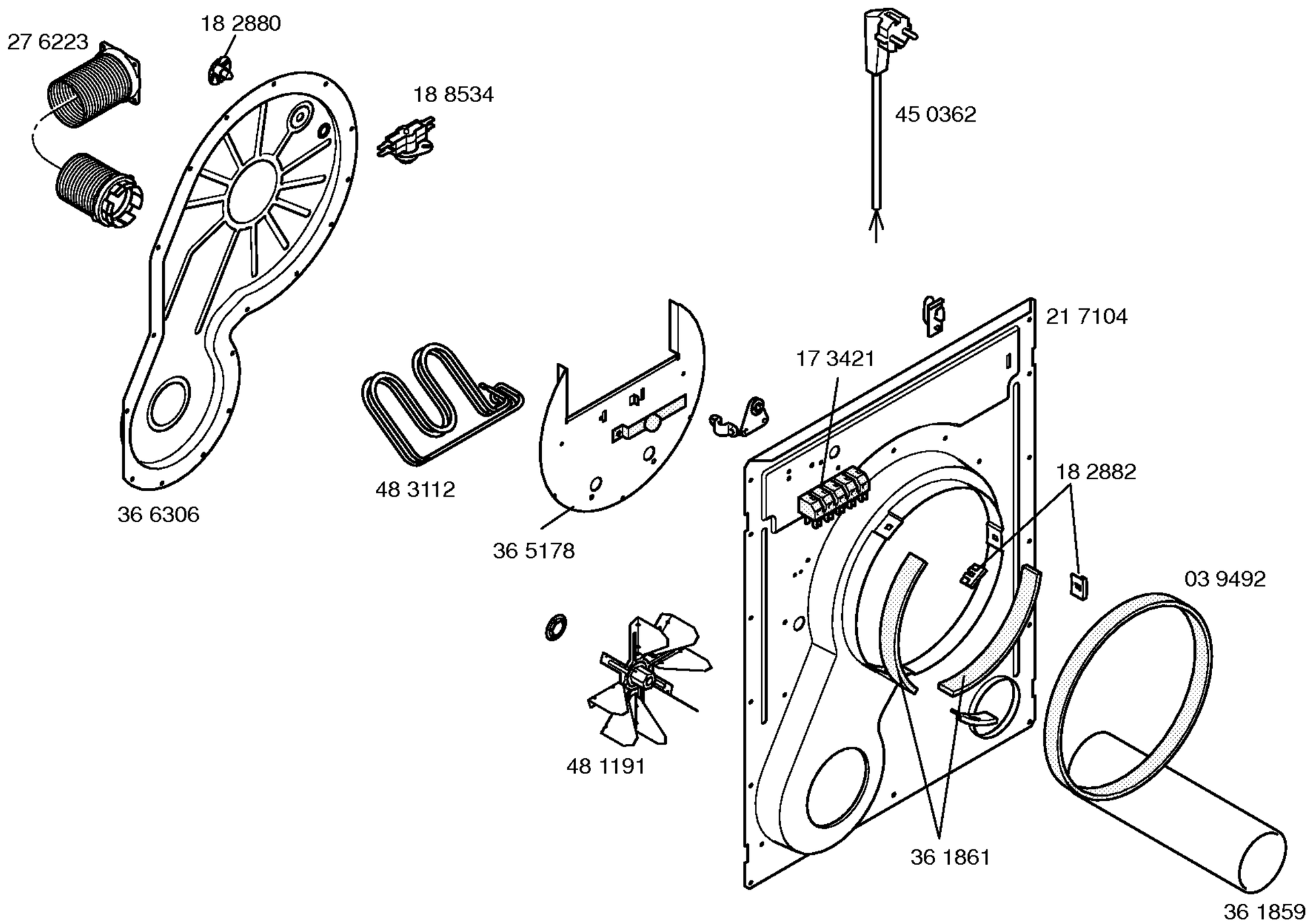

Copyright © (2015) by Balay / 205502