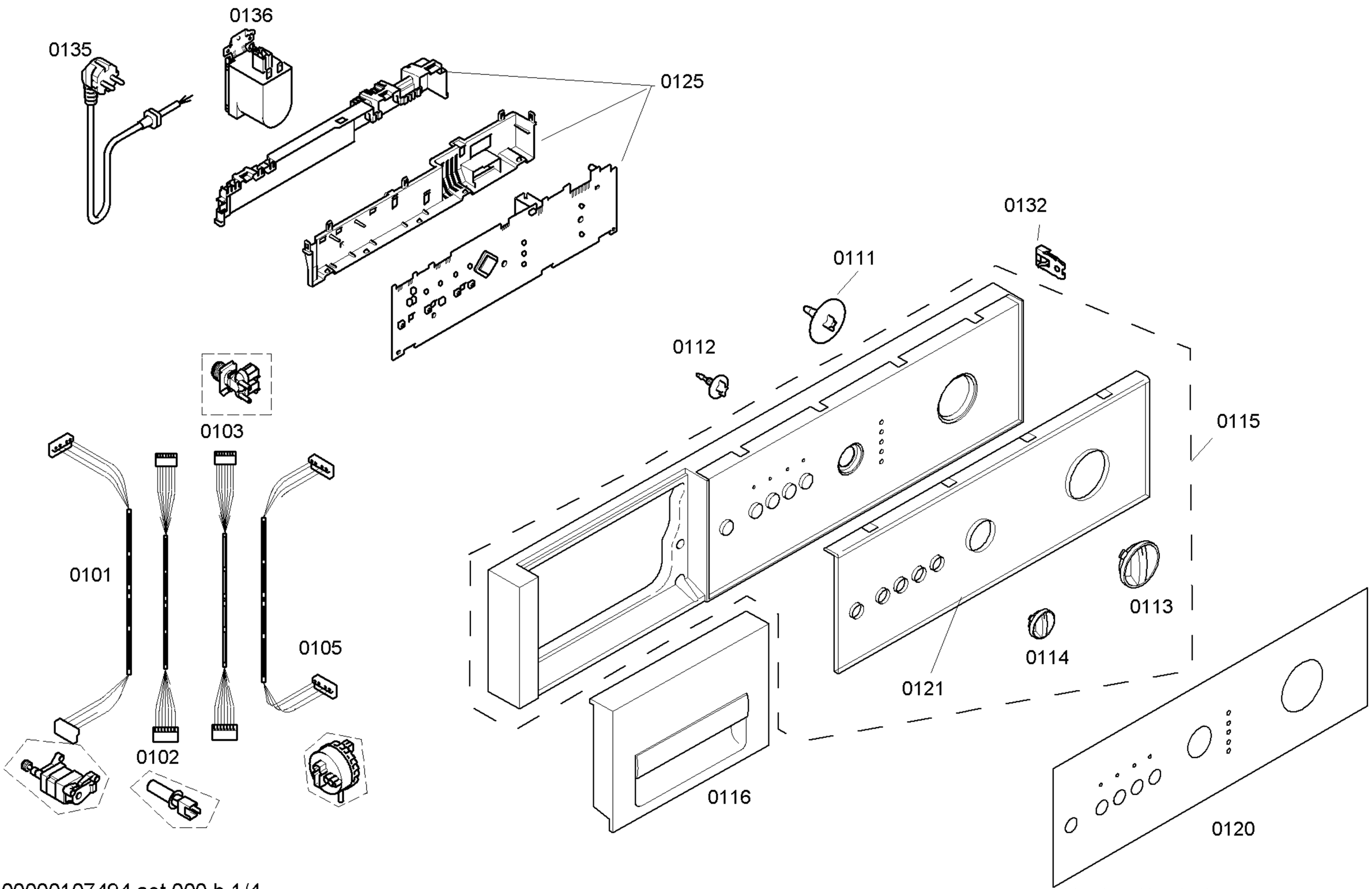

58300000107494 aet 000 b 1/4

Copyright © (2013) by Balay / 205502

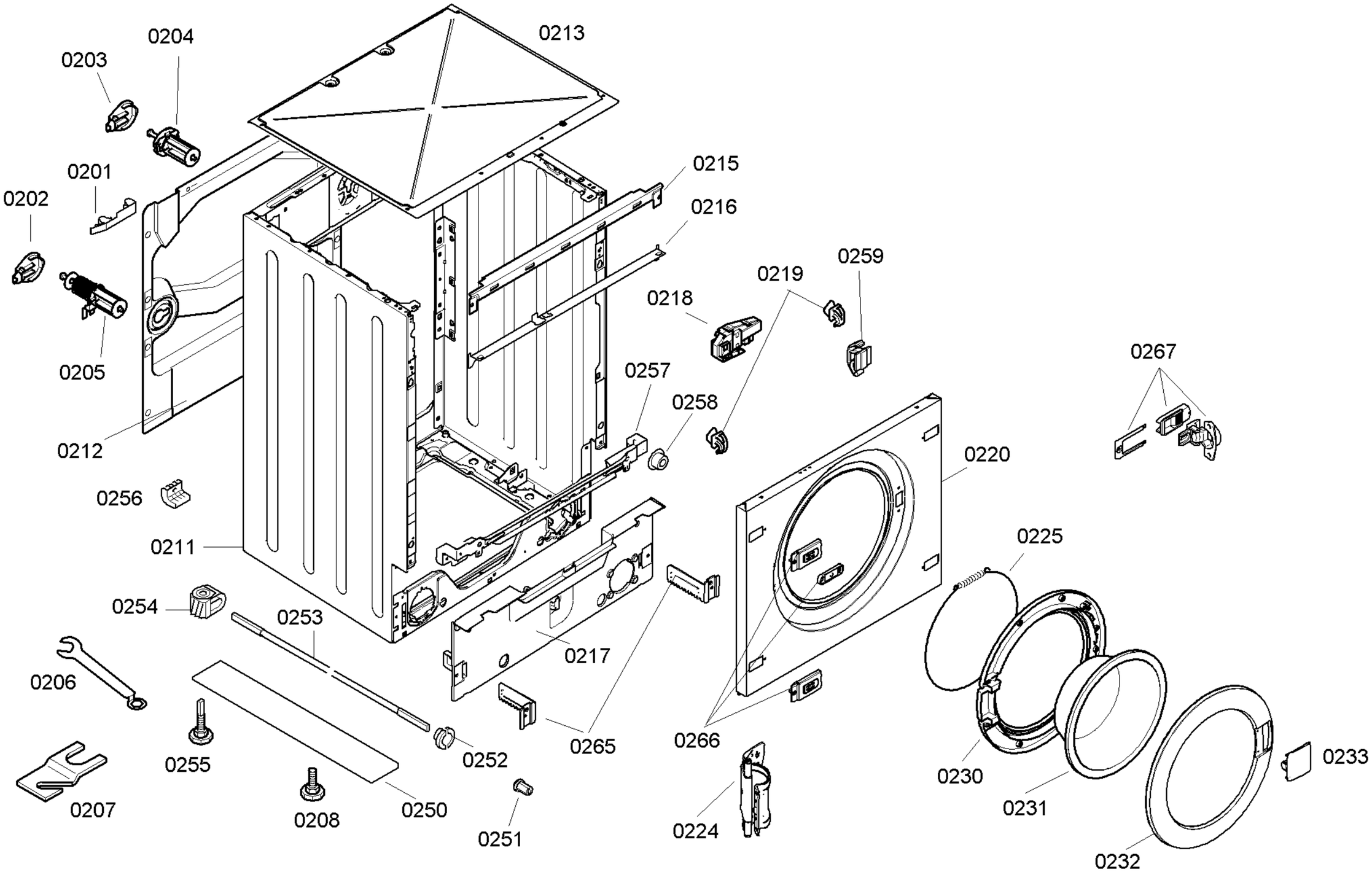

Copyright © (2013) by Balay / 205502

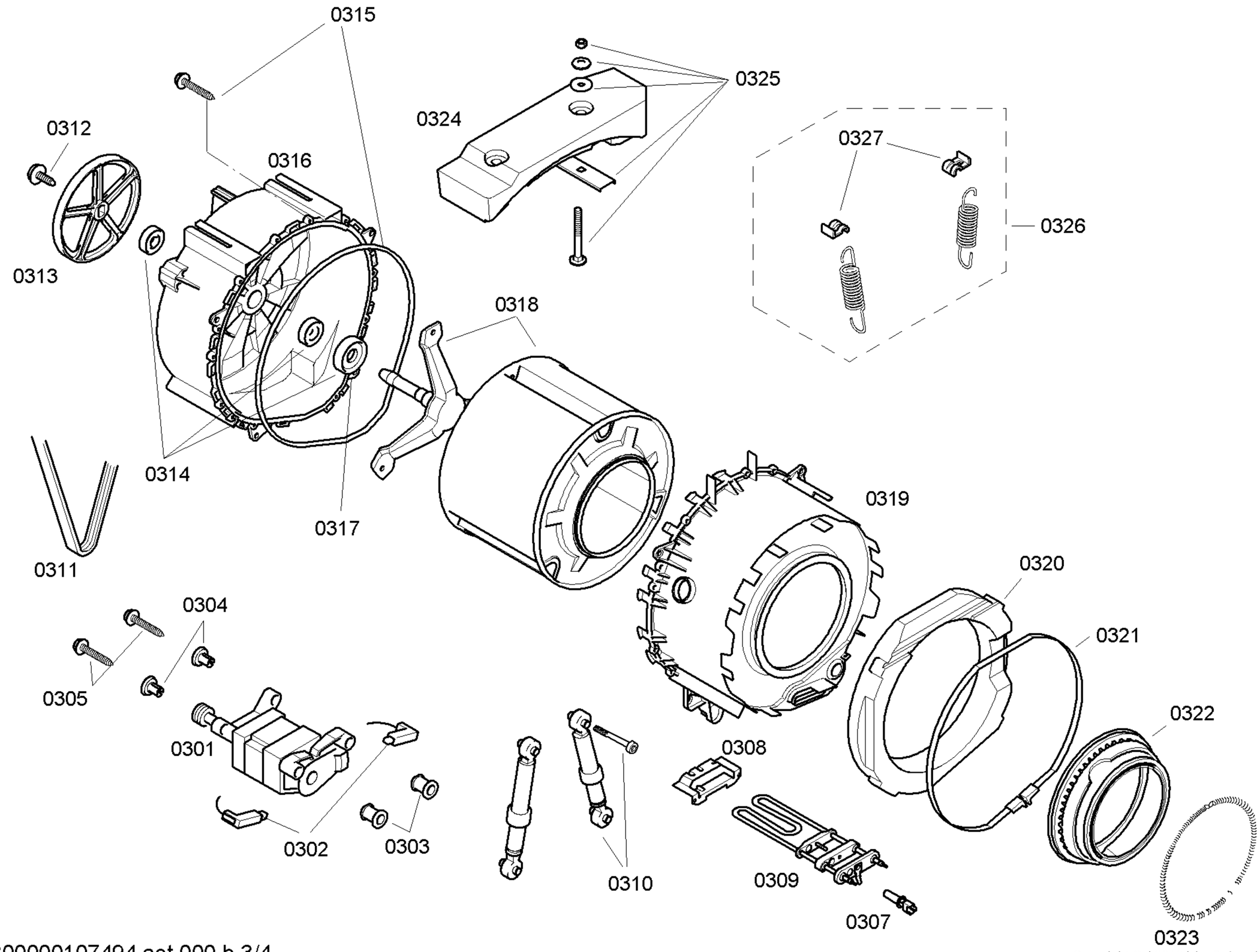

Copyright © (2013) by Balay / 205502

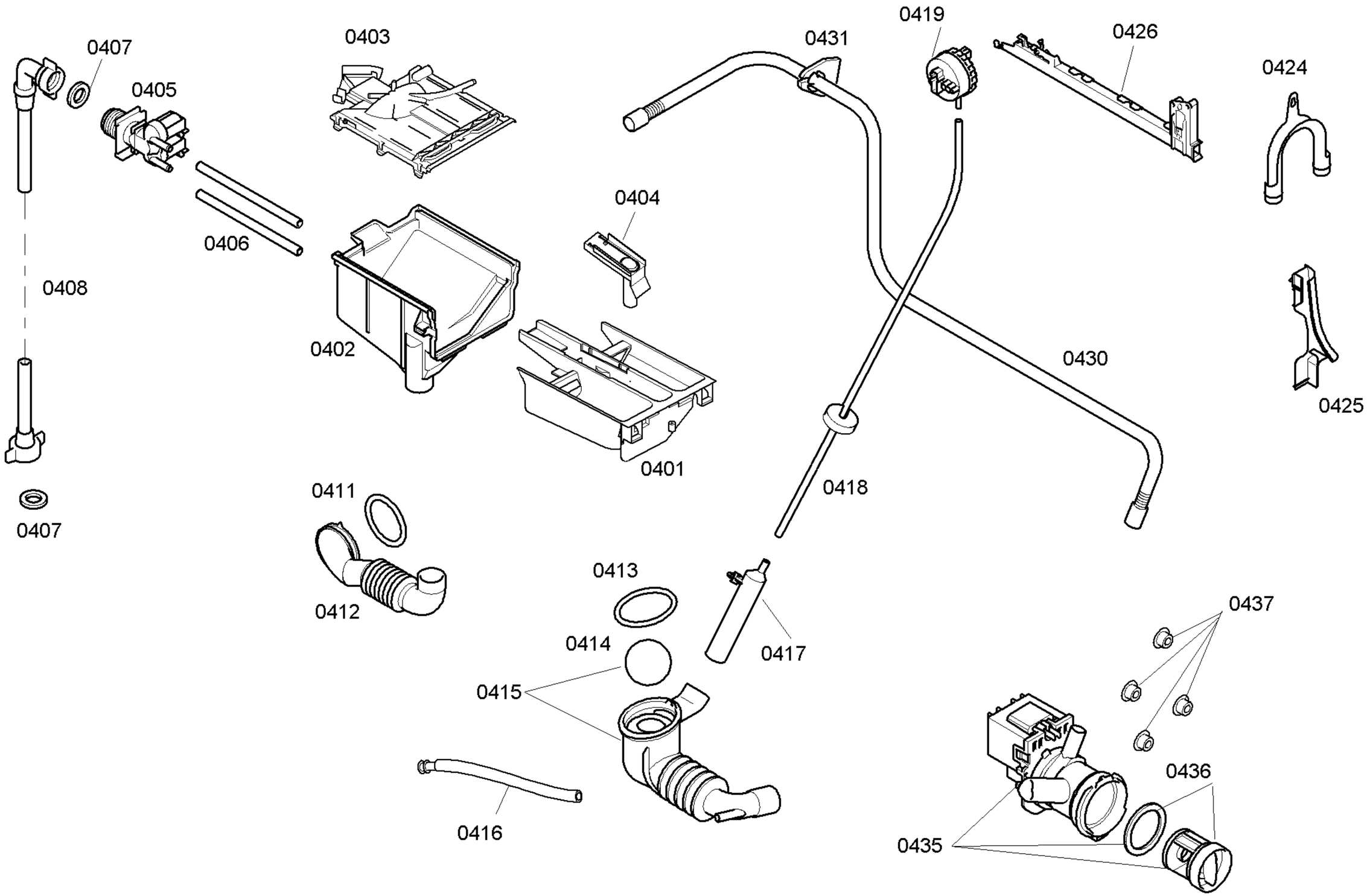

Copyright © (2013) by Balay / 205502