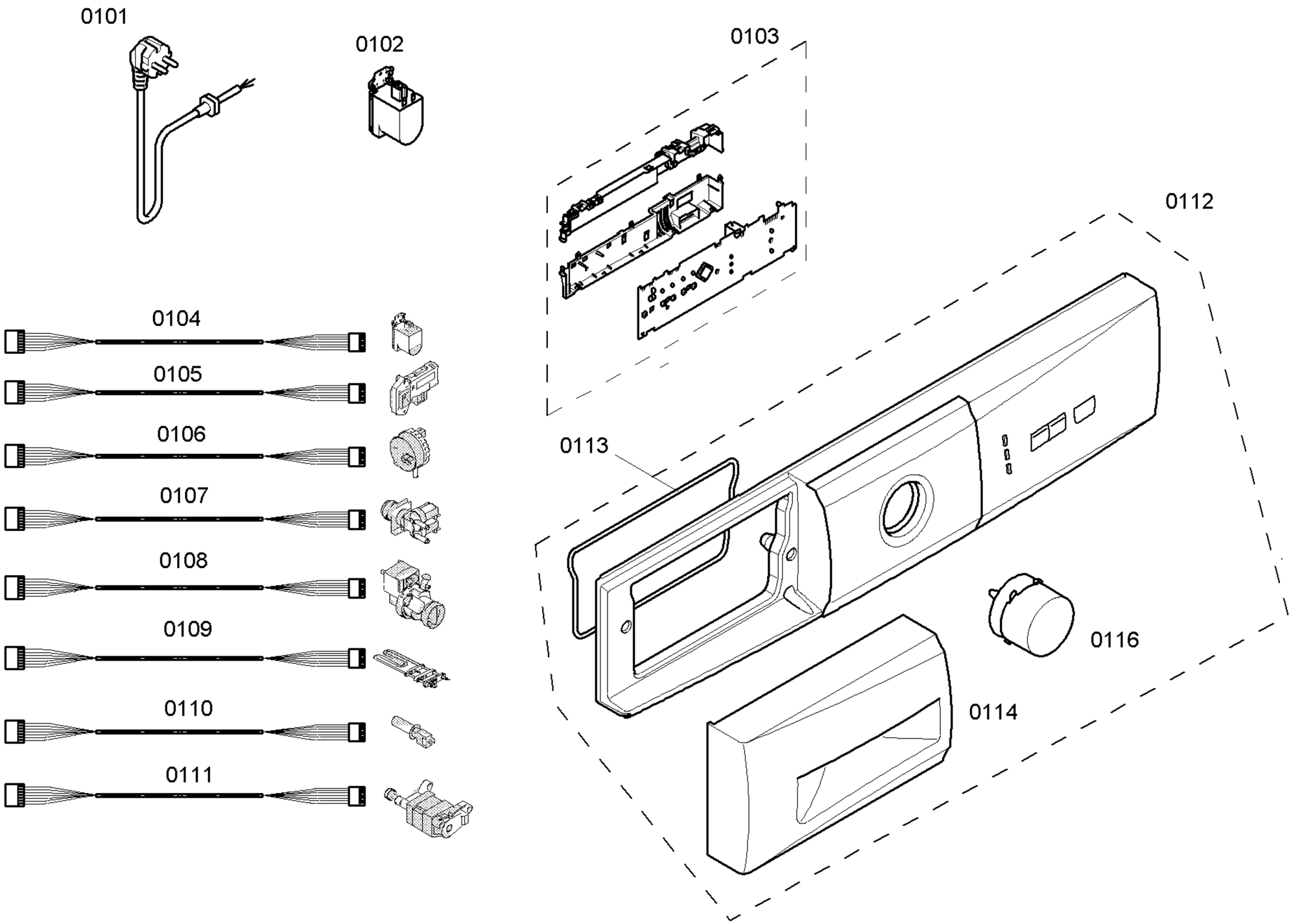

Copyright © (2013) by Balay / 205502

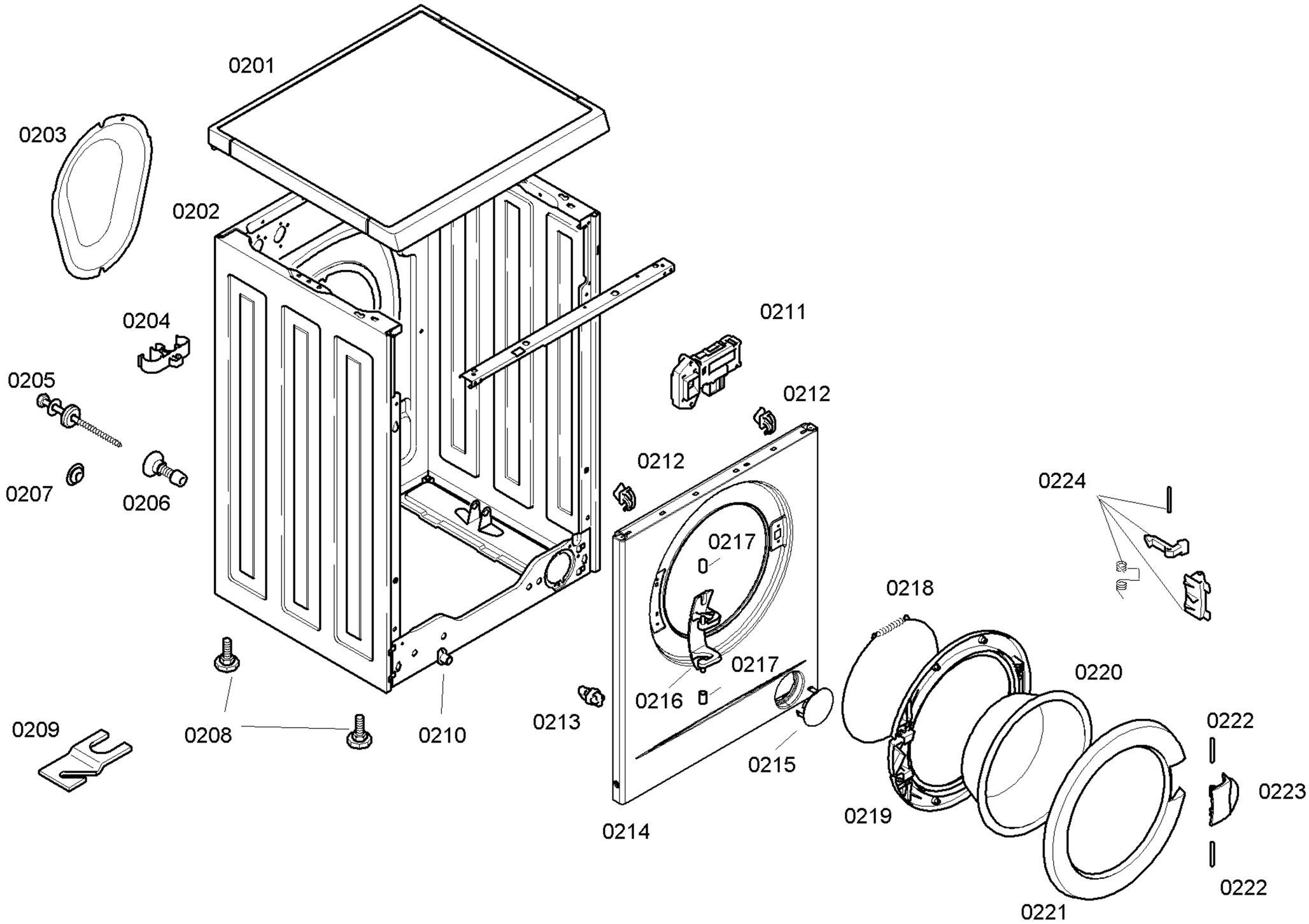

Copyright © (2013) by Balay / 205502

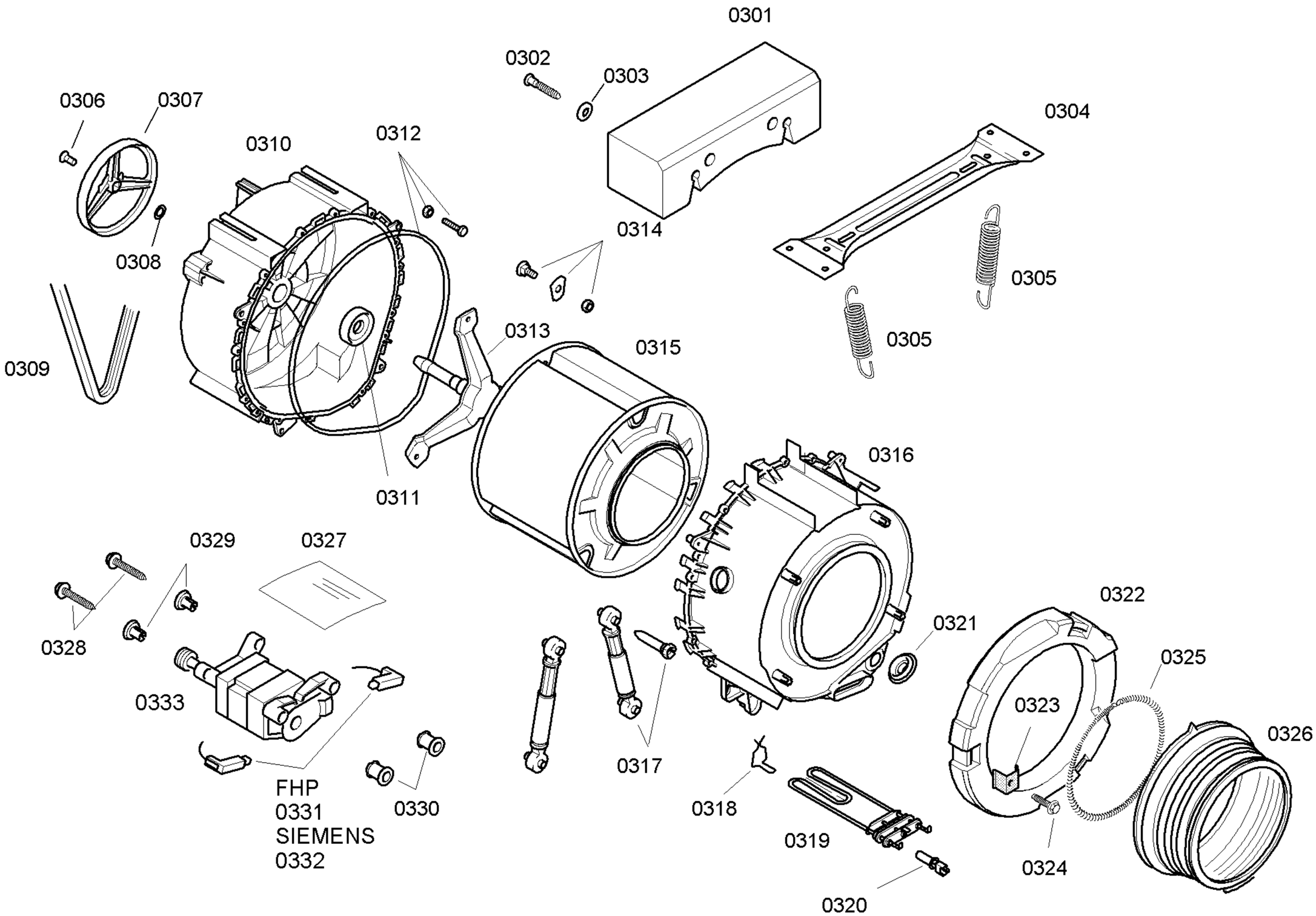

Copyright © (2013) by Balay / 205502

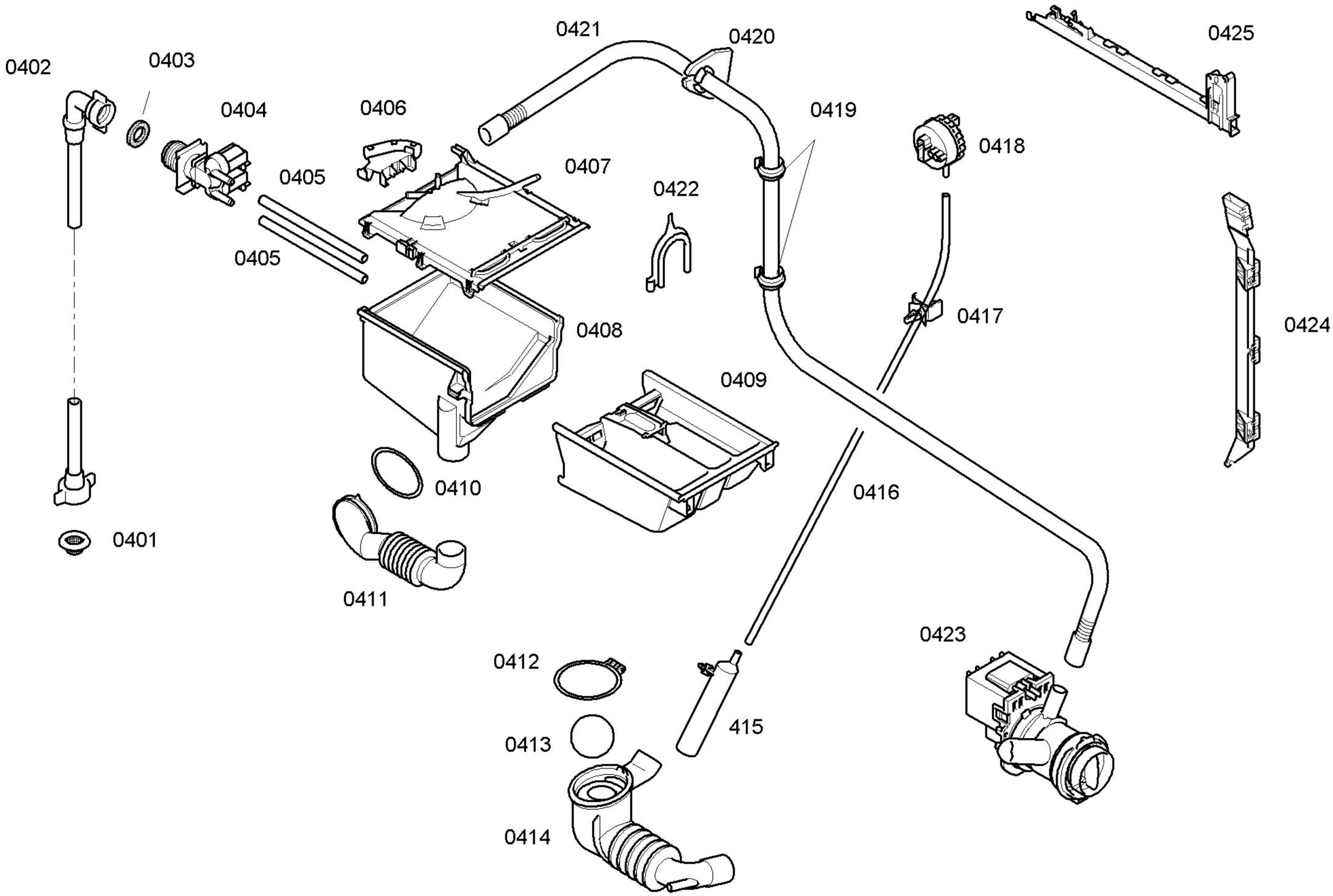

Copyright © (2013) by Balay / 205502