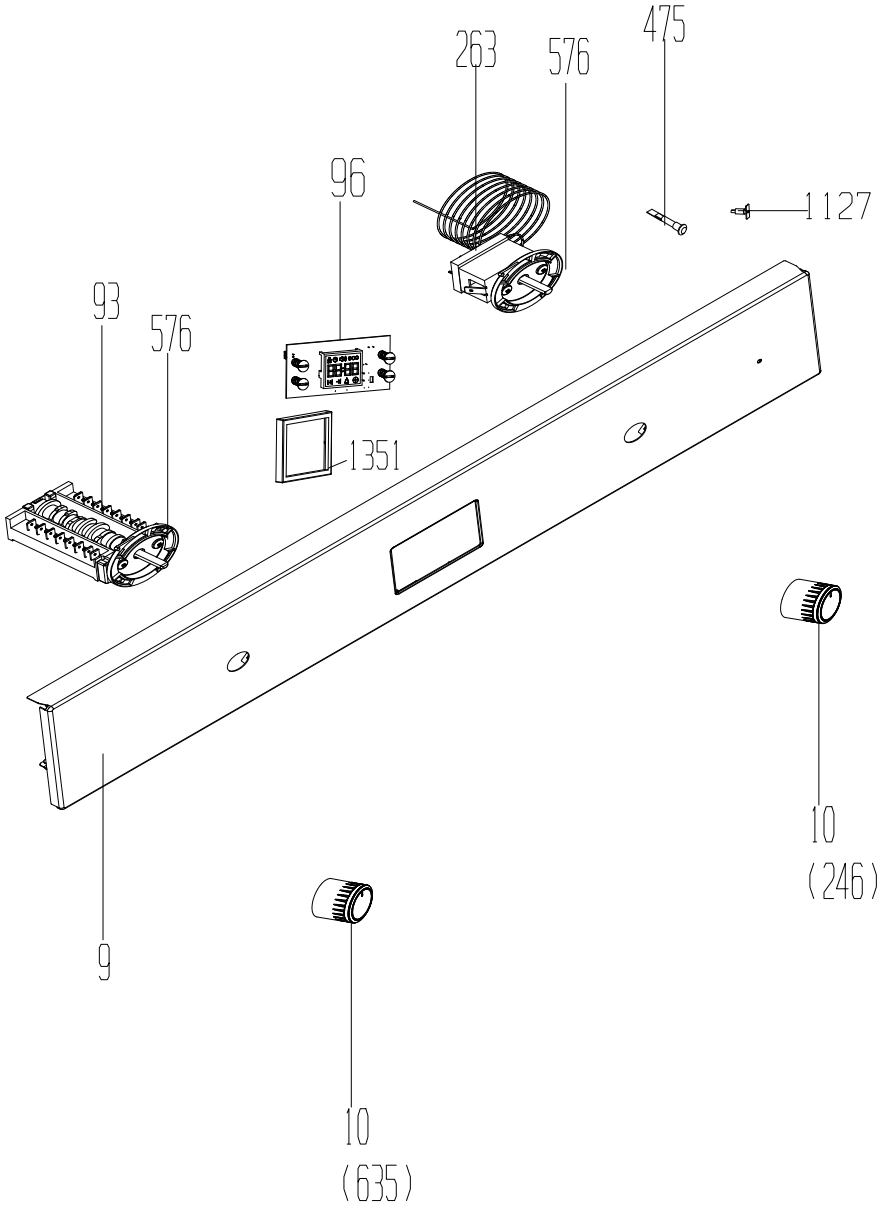

P705-7-84	The exploded view refers to different models within product range. Some of the parts shown here may not be in the bill of material.(Part list or BOM) For this reason,this view must be used together with the stok no and the BOM of the product Patlatilmis resim urun gamindaki farkli modeller icin hazirlandigindan burada gosterilen parcalarin bazilari parca listenizde olmayabilir.Bu nedenle,bu resim urun stok nosu ve parca listesiyle birlikte kullanilmalidir.			
Drawing date / Cizim tarihi	Drawing by/Cizen kisi	Revizyon / date	Resin ismi / Picture Name	arçelik COOKING APPLIANCE PLANT
13.10.2014	YALCIN KUM	0	Bar.Ank.adora saatli pano/Built in oven-panel&adora timer gr	