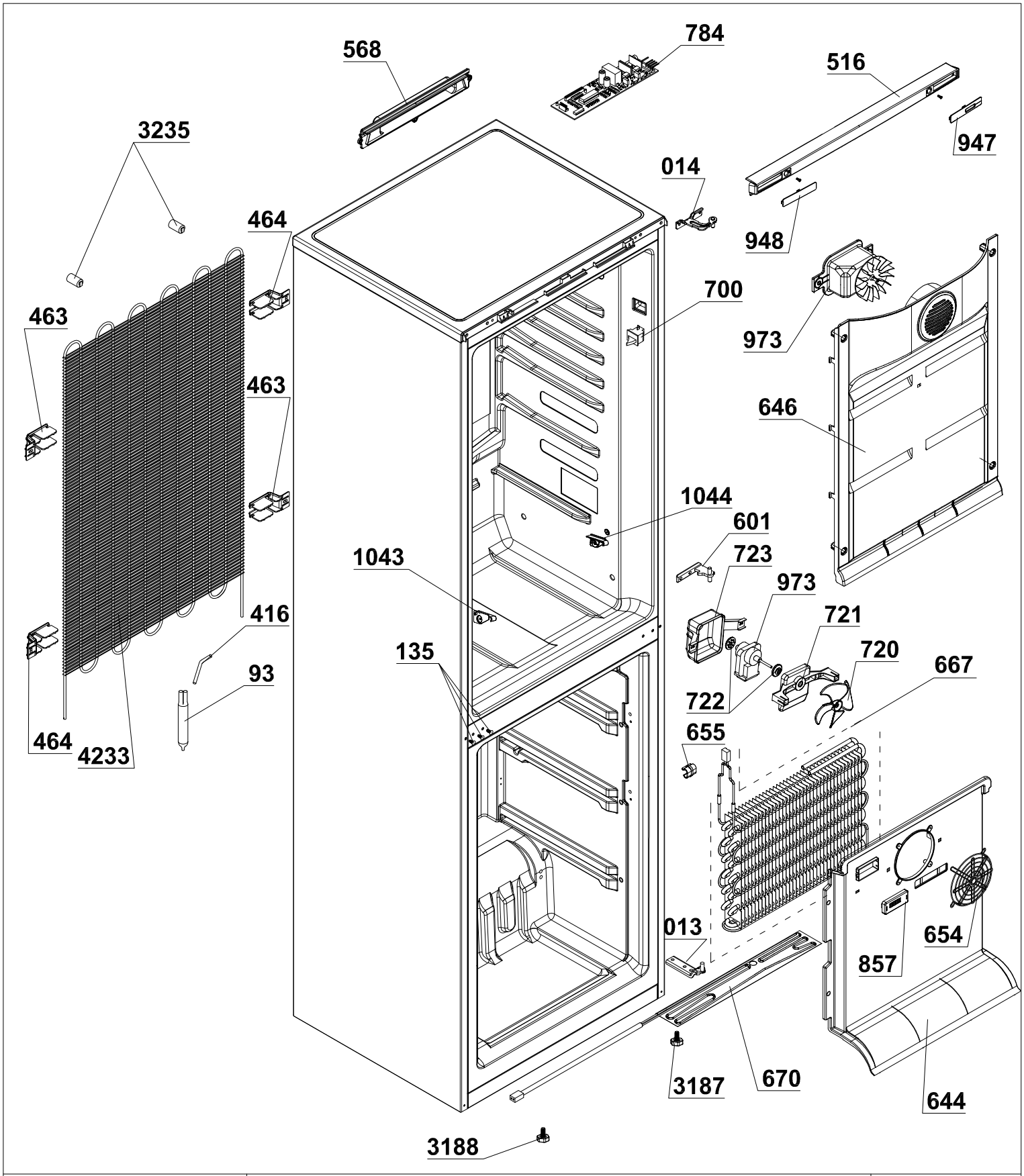

Product code: 7513820002	Model: COMBI K60320N	Appendix: 1
CNA 32420 BEKO		Revision: 00
Ionela Enculescu - PDD		10.09.2009