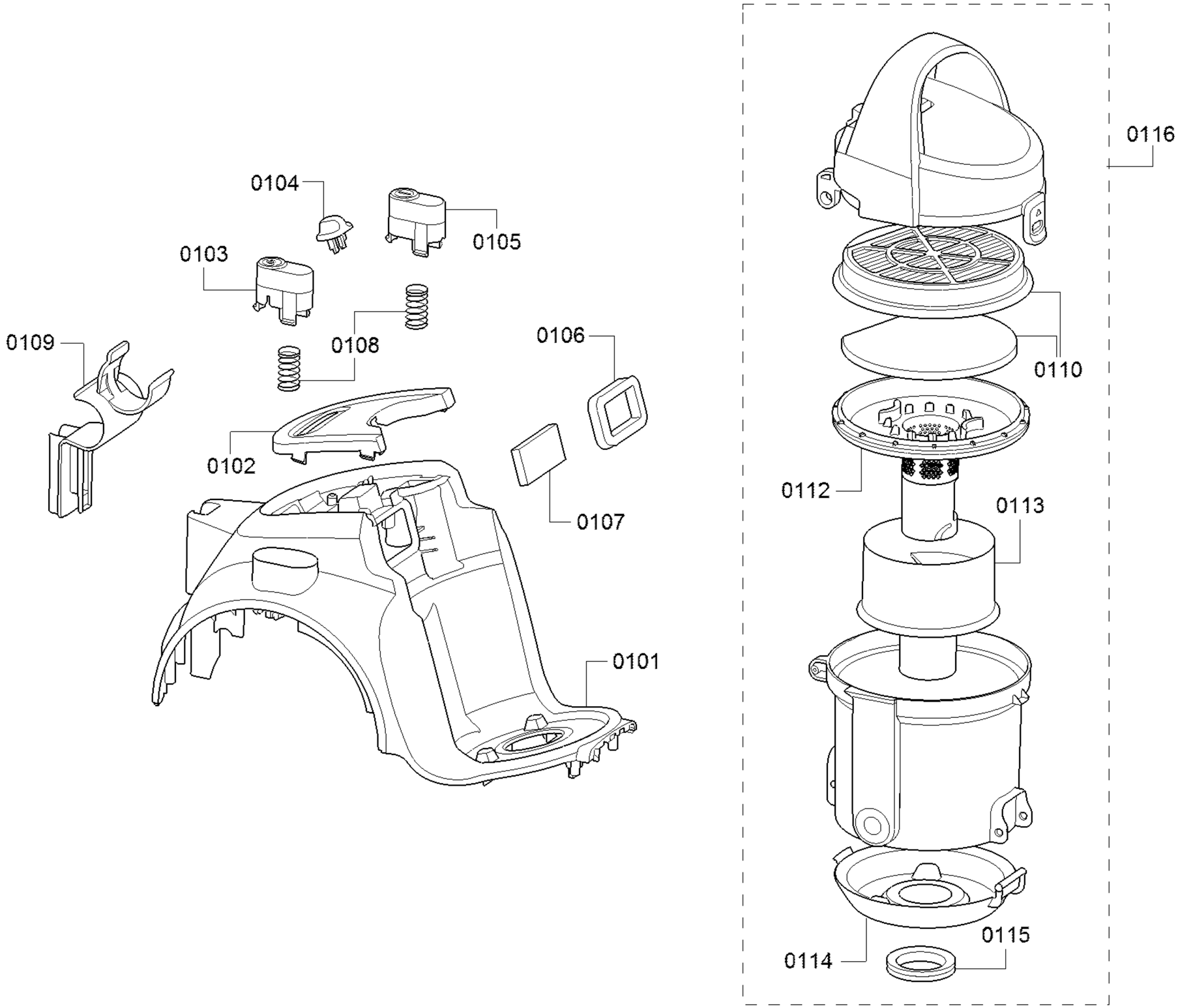

Copyright © (2019) by Bosch / 205502

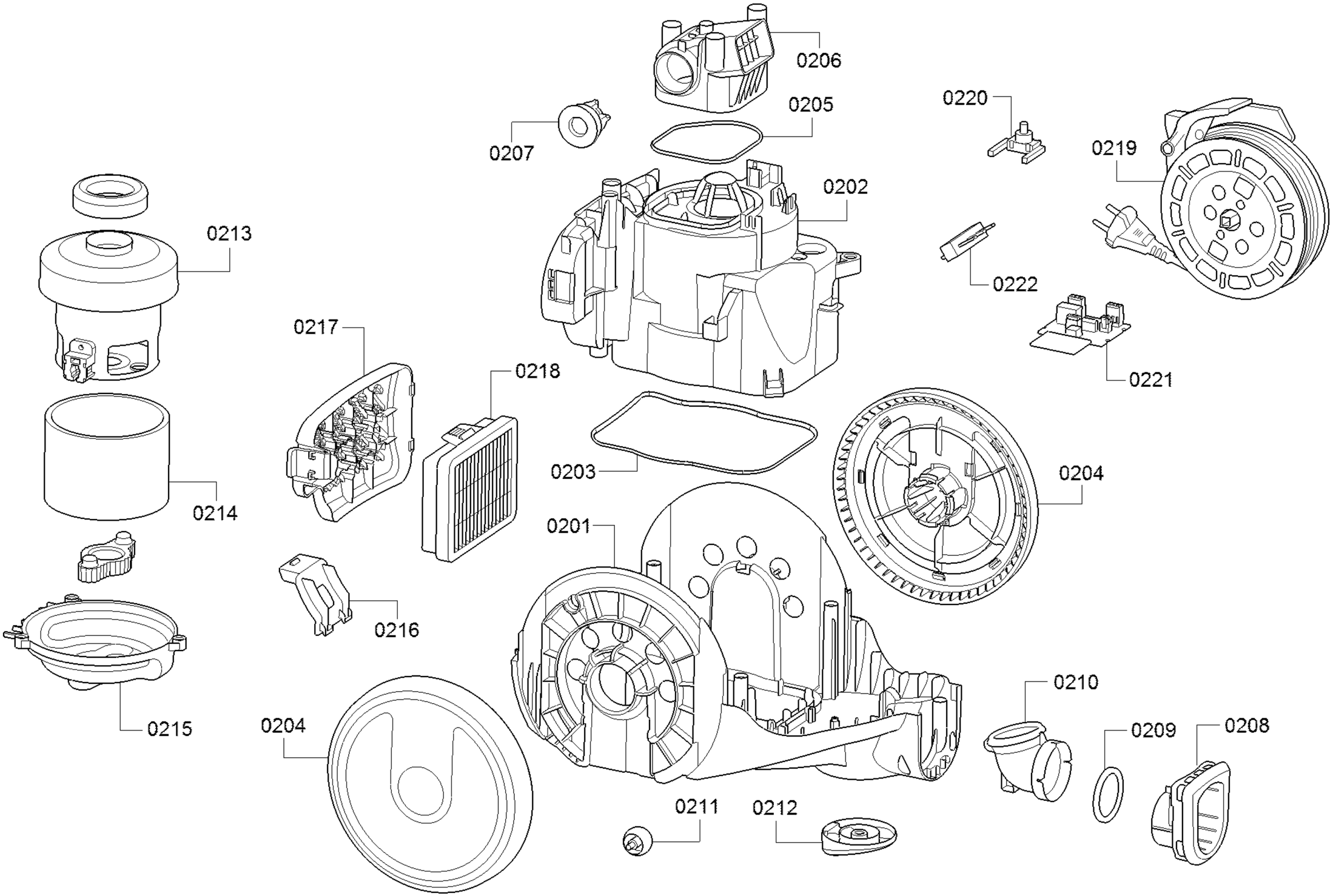

58300000213077 aet 000 a 2/3

Copyright © (2019) by Bosch / 205502

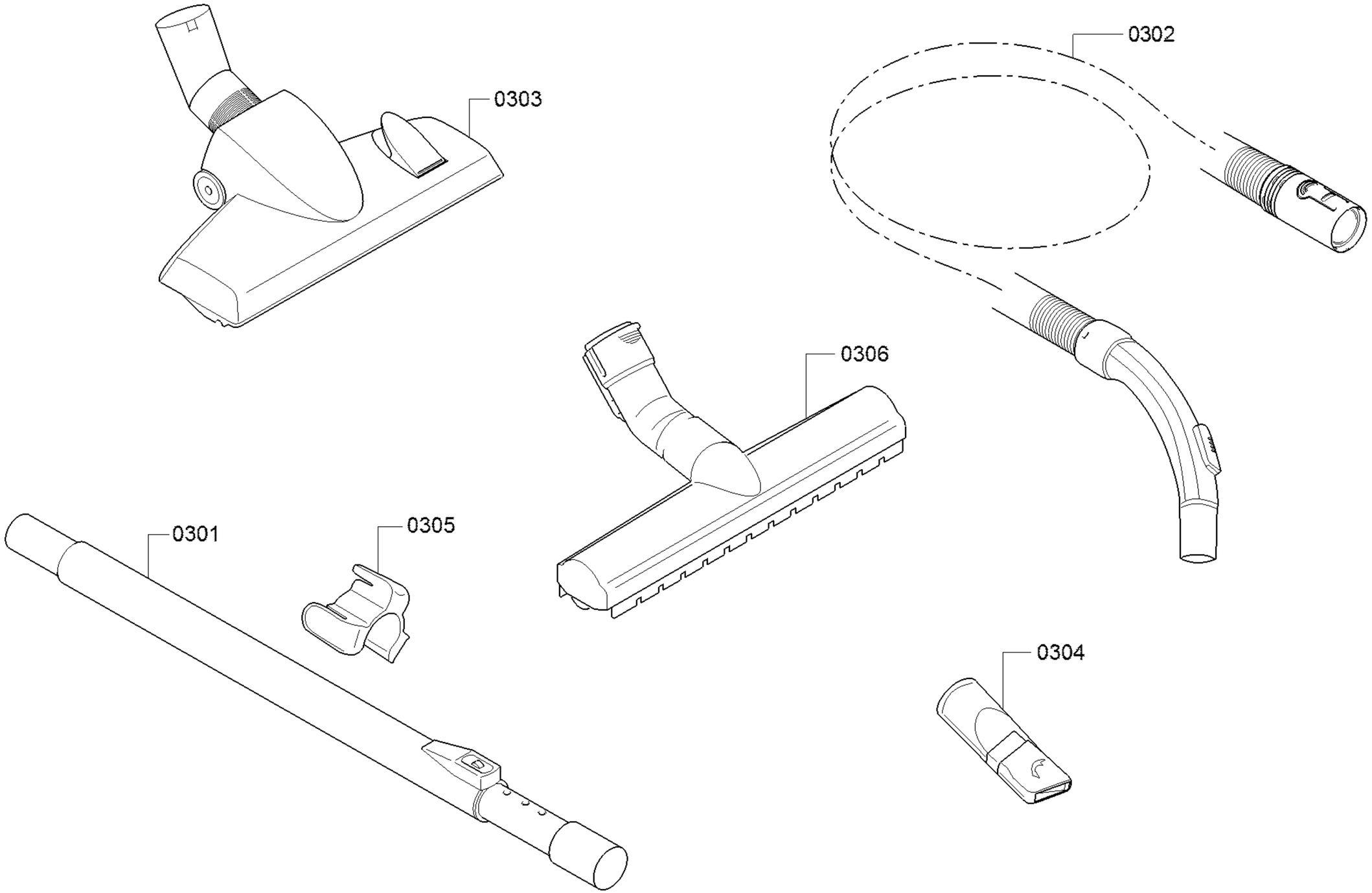

58300000213077 aet 000 a 3/3

Copyright © (2019) by Bosch / 205502