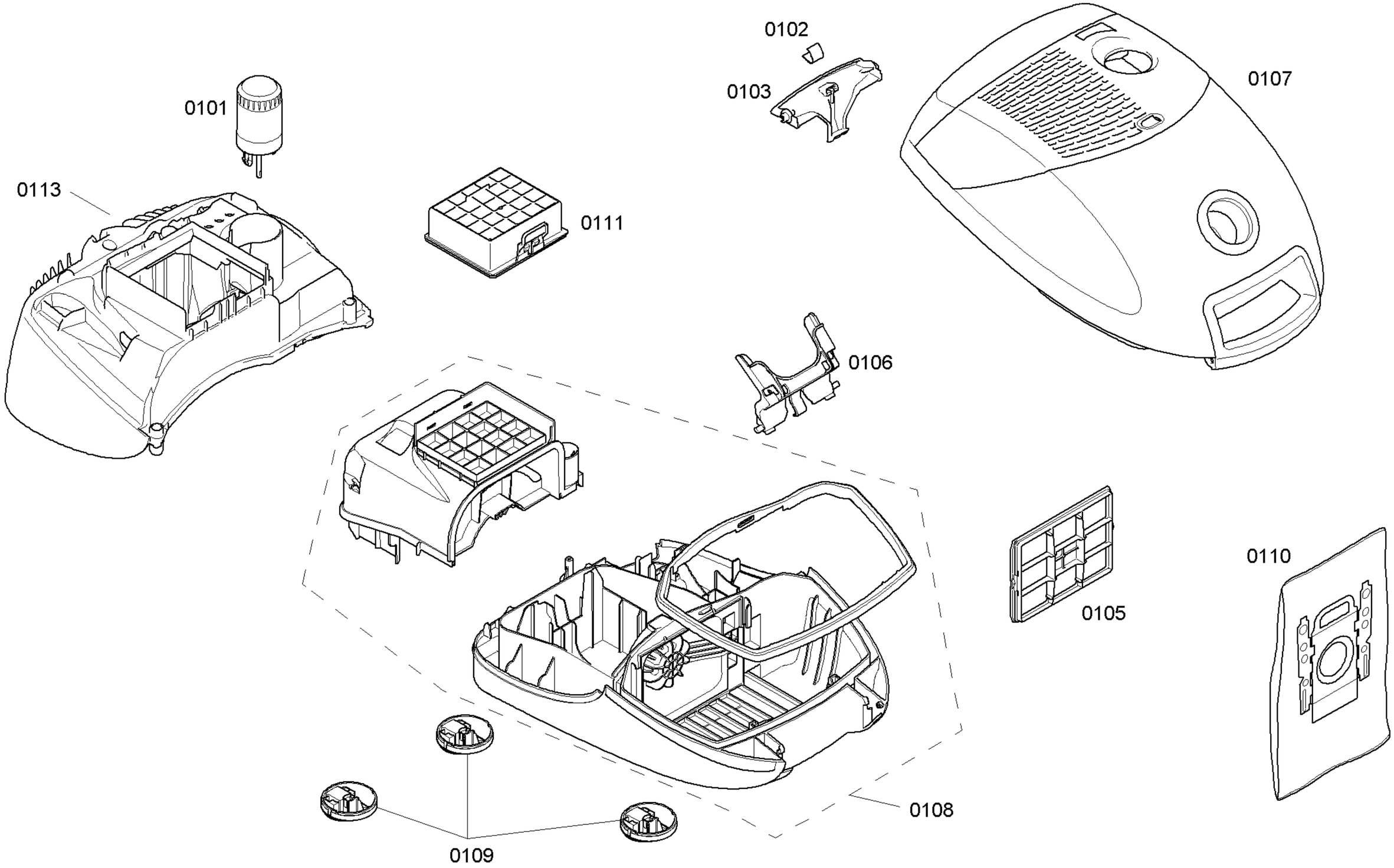

Copyright © (2009) by BOSCH / 500990

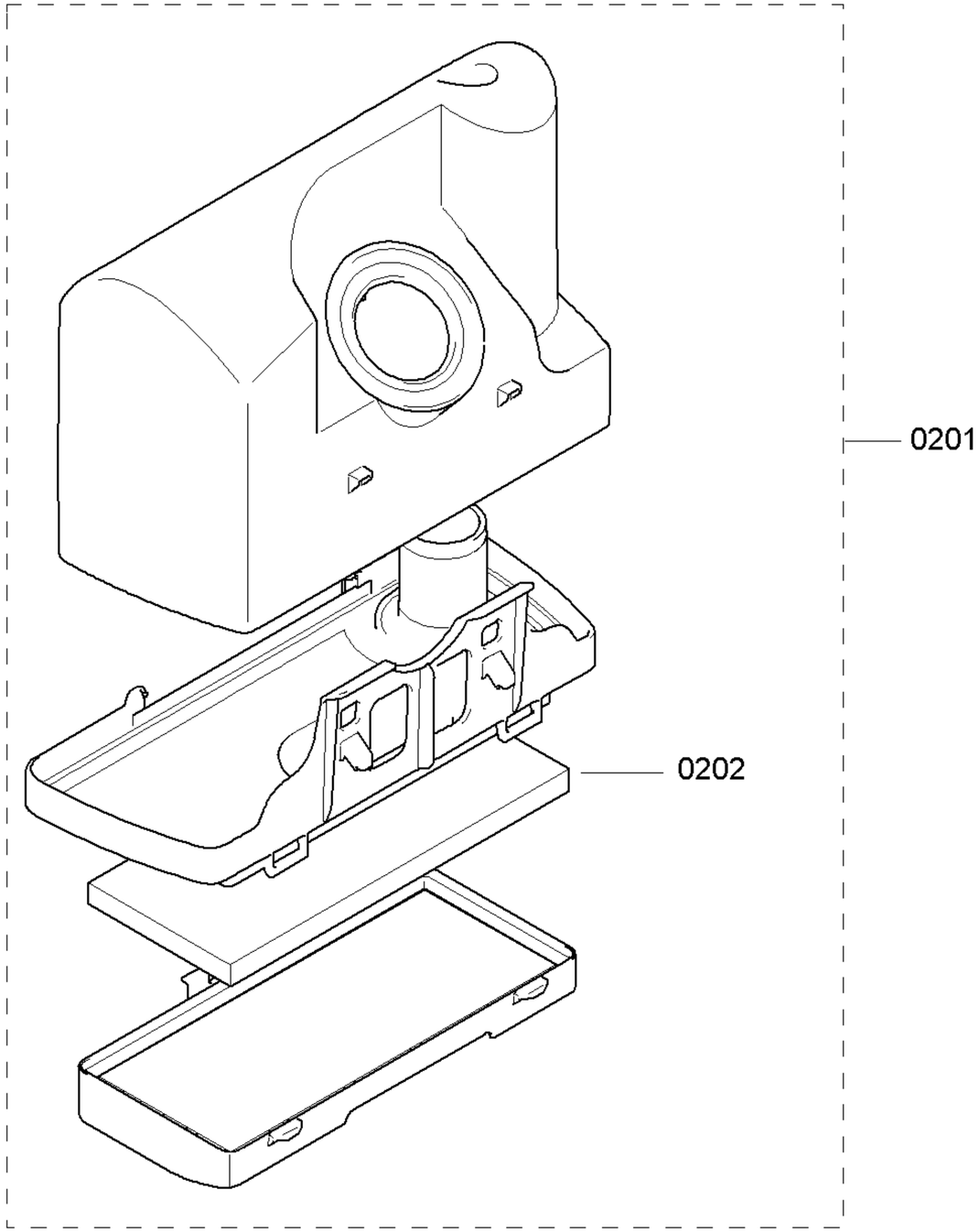

Copyright © (2009) by BOSCH / 500990

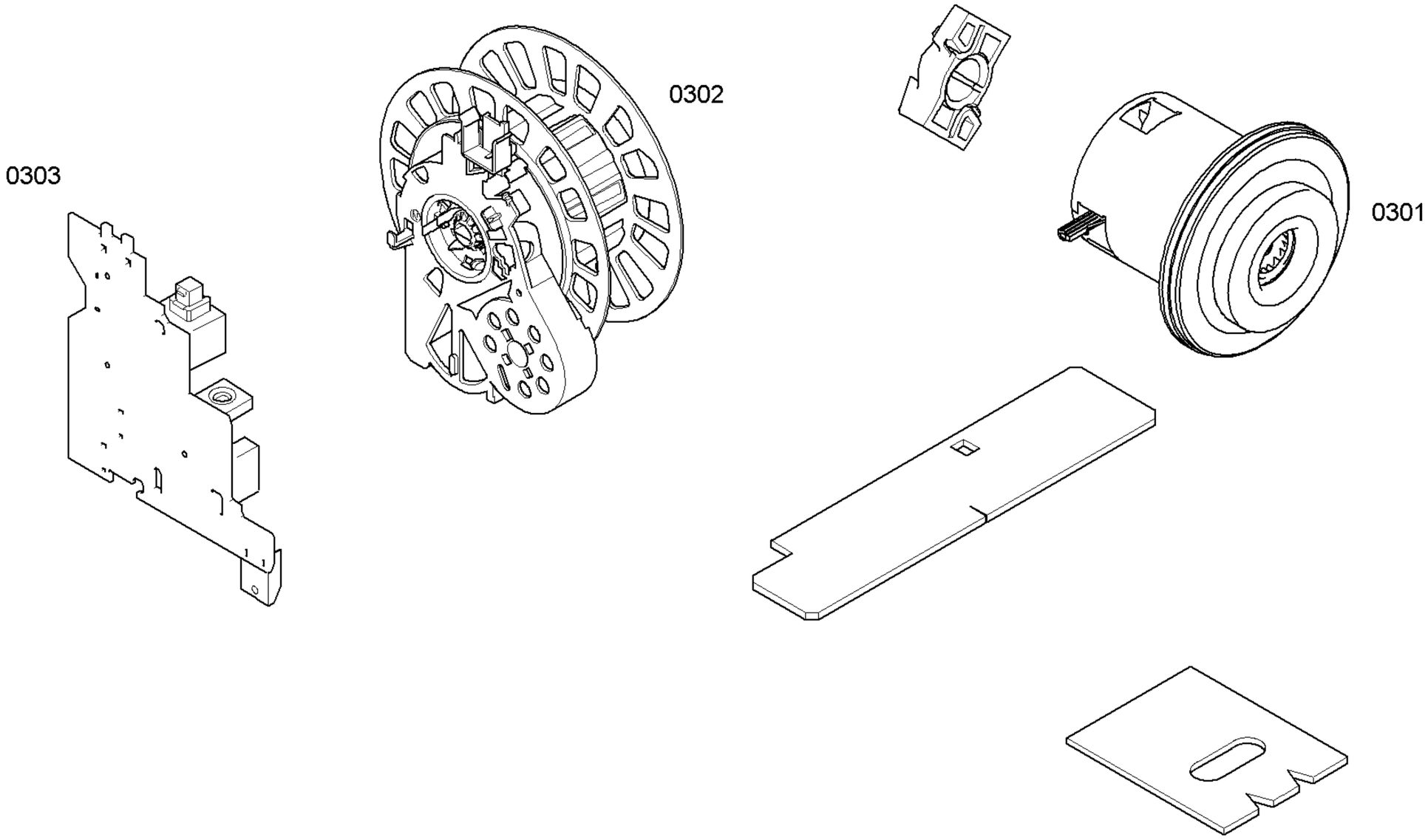

Copyright © (2009) by BOSCH / 500990

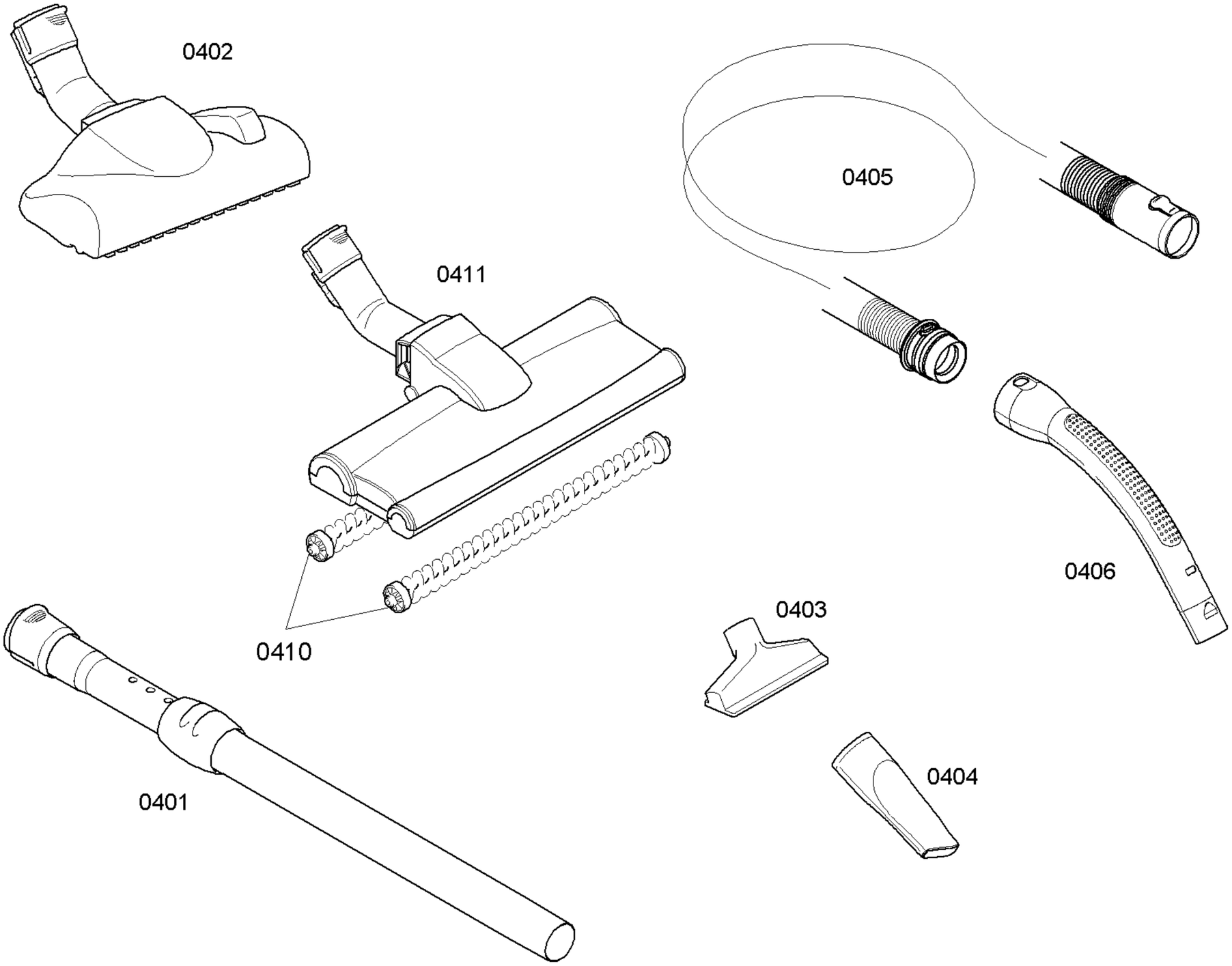

Copyright © (2009) by BOSCH / 500990