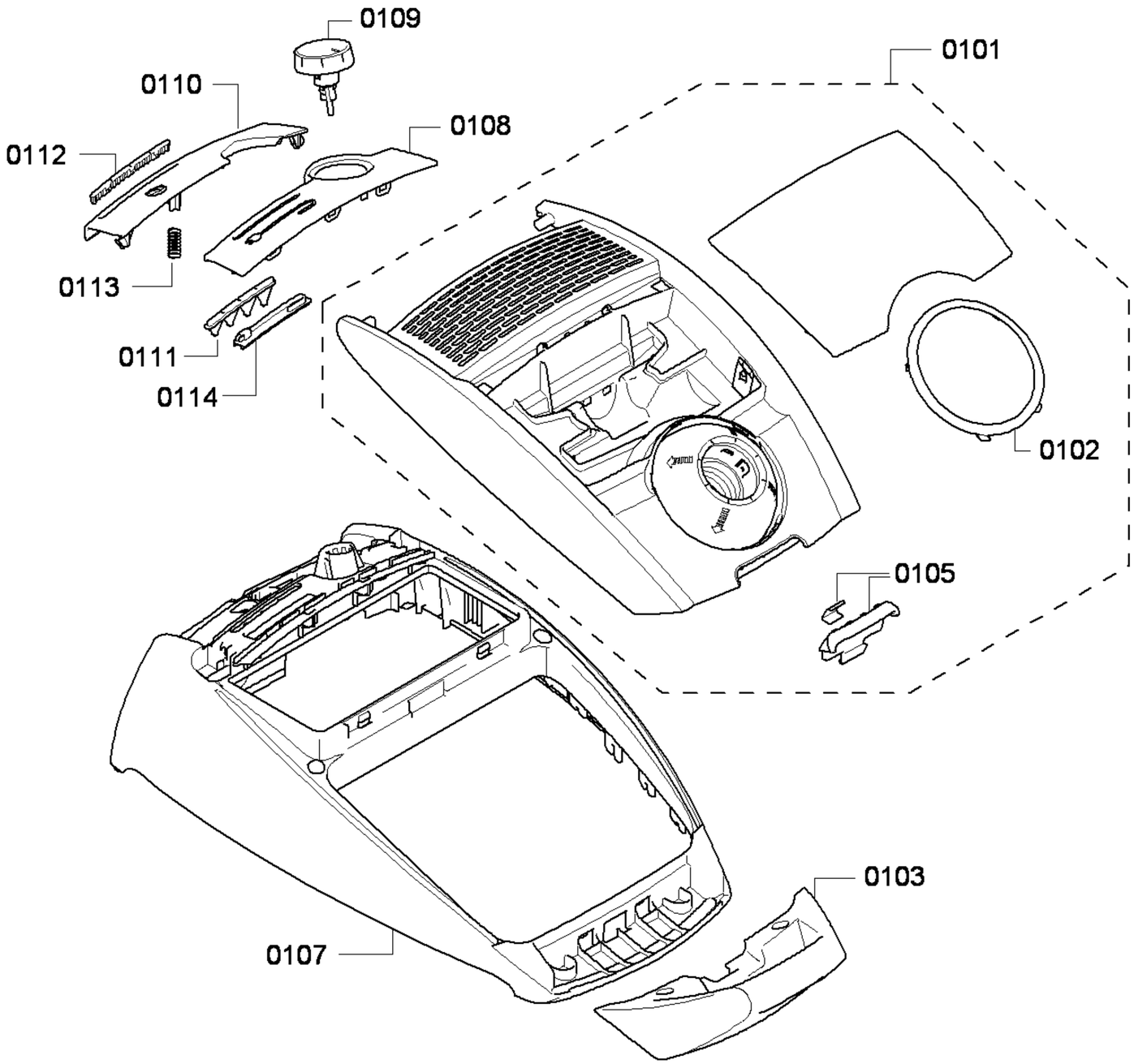

583000001 46132 aet 000 b 1/3

Copyright © (2010) by Bosch / 205502

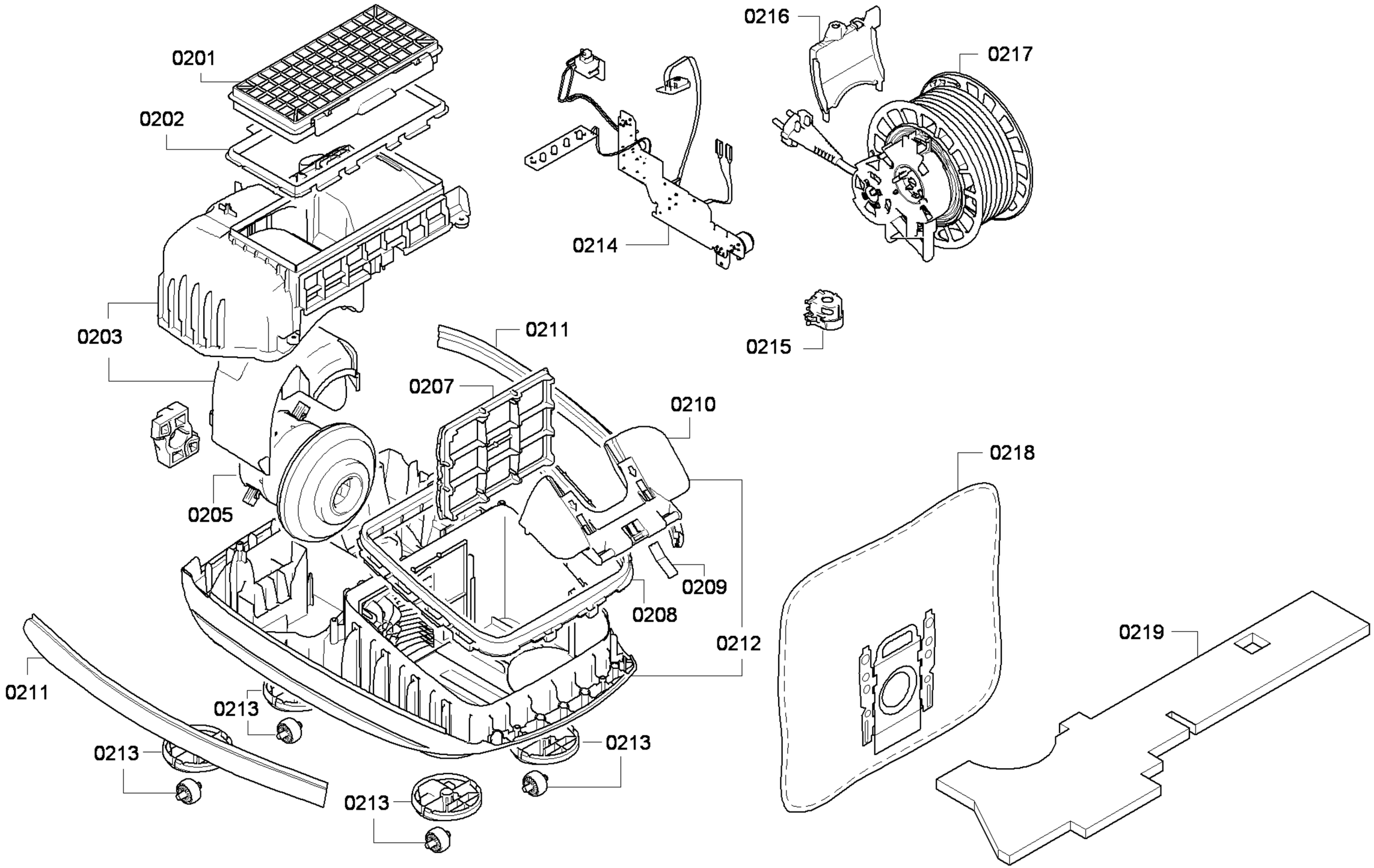

583000001461 32 aet 000 b 2/3

Copyright © (2010) by Bosch / 205502

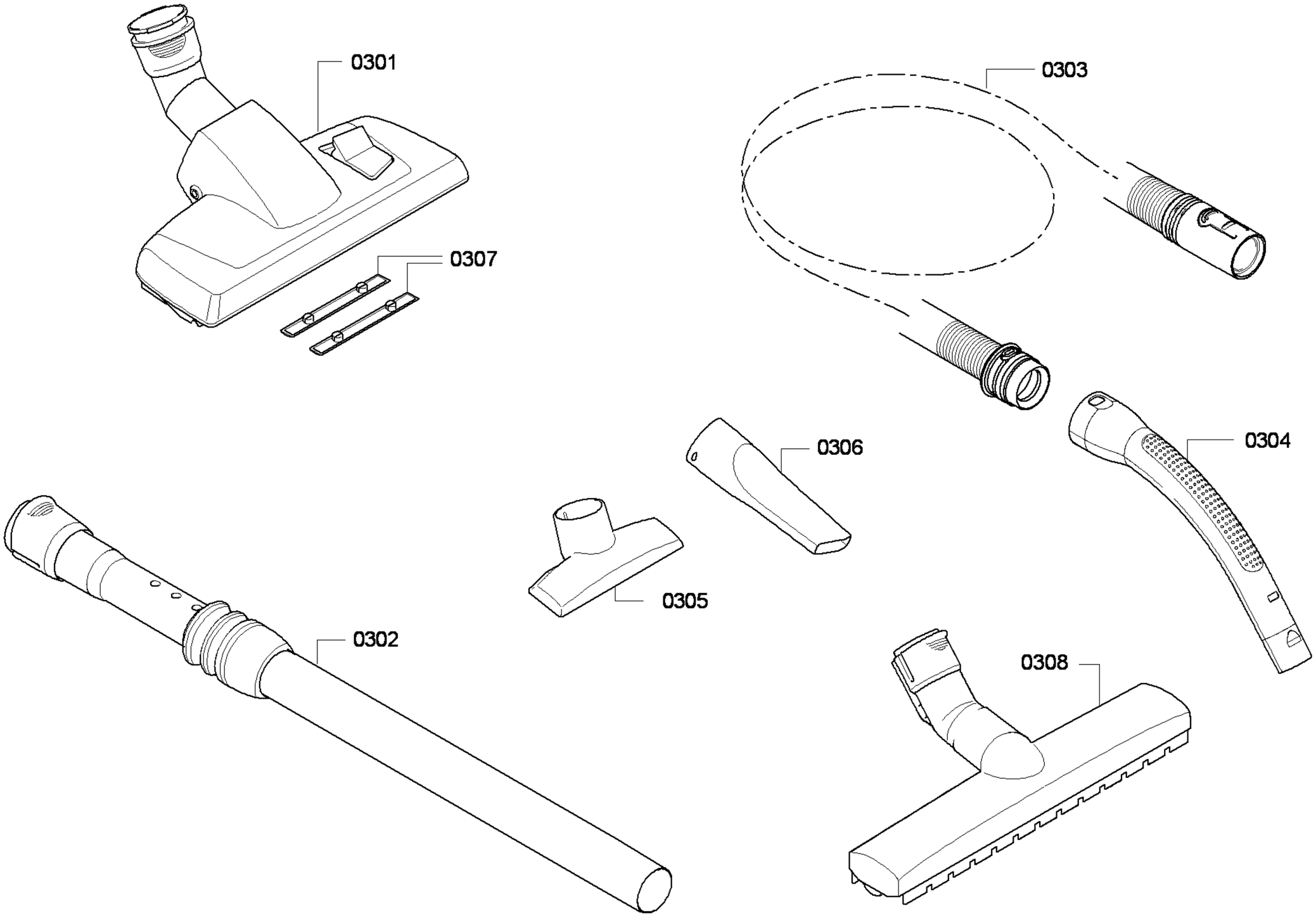

583000001461 32 aet 000 b 3/3

Copyright © (2010) by Bosch / 205502