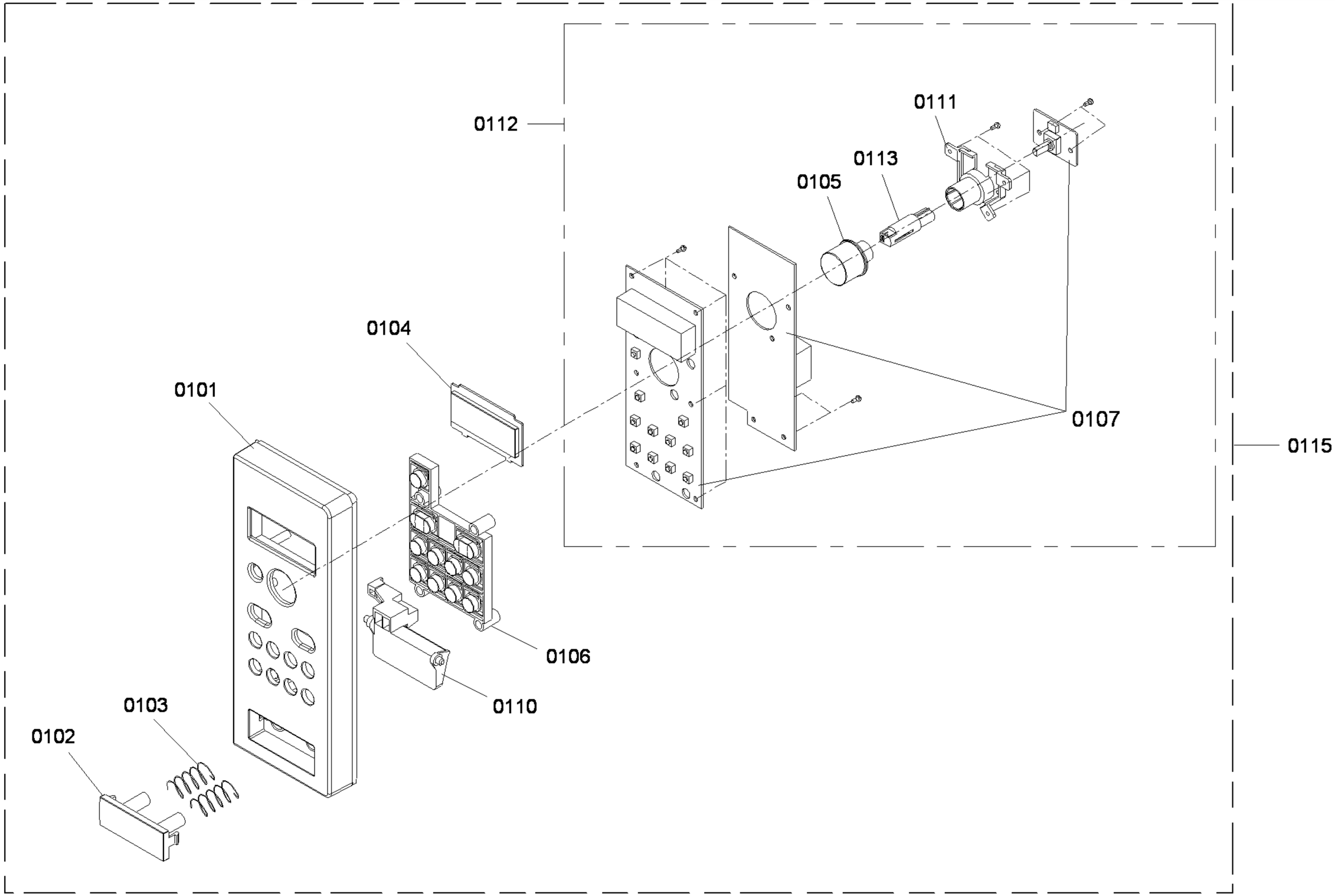

Copyright © (2010) by Bosch / 205502

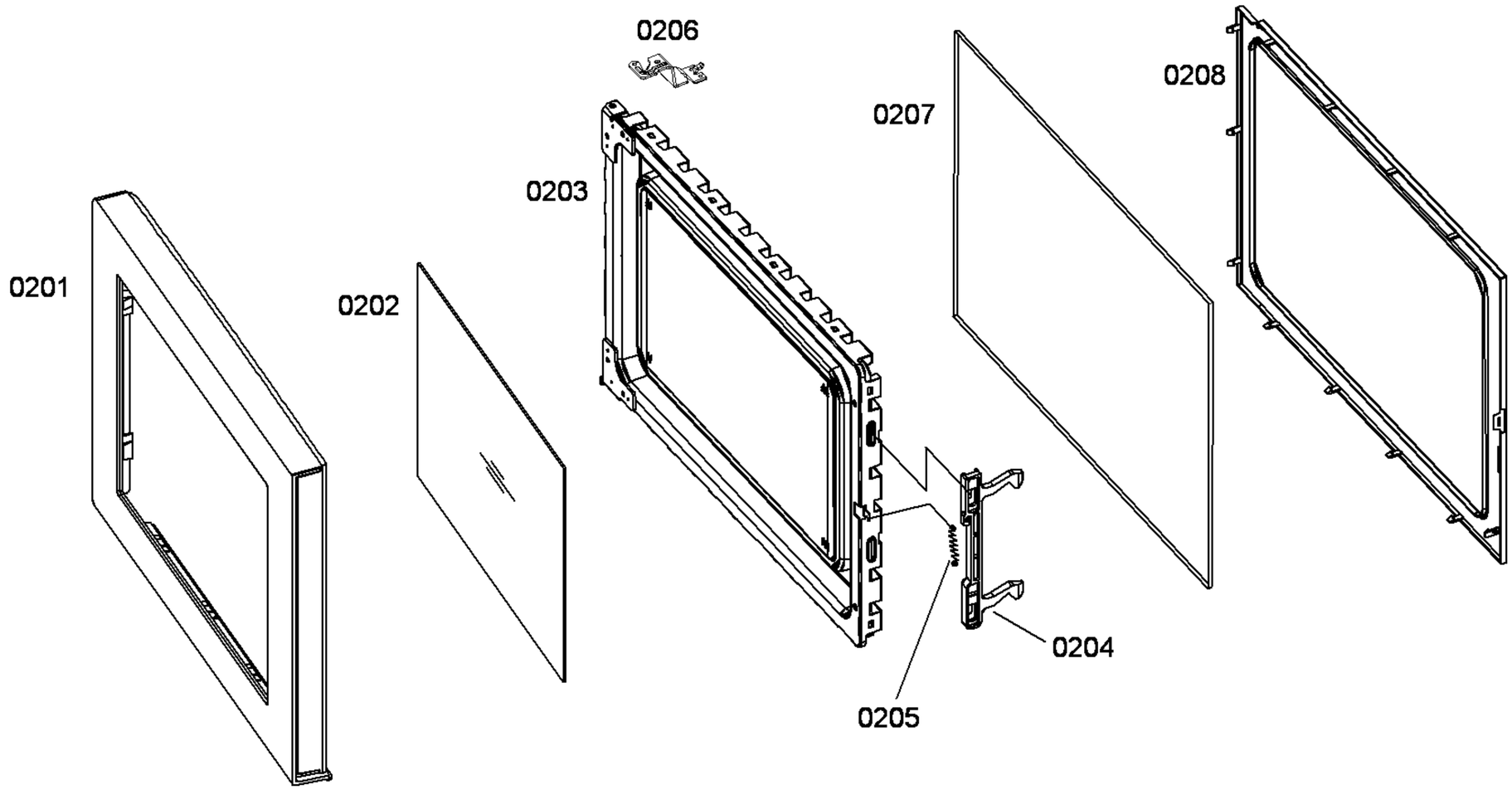

Copyright © (2010) by Bosch / 205502

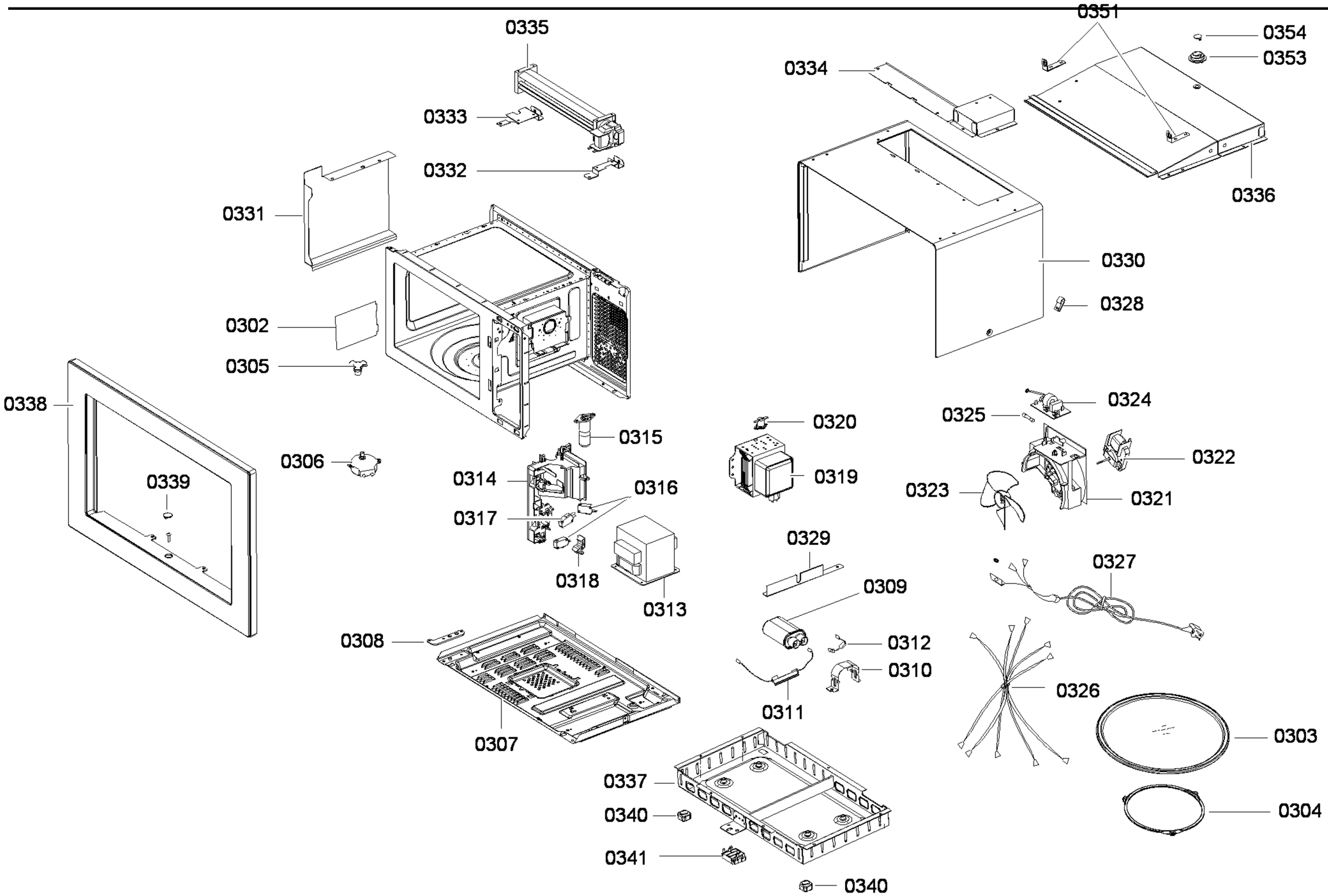

Copyright © (2010) by Bosch / 205502