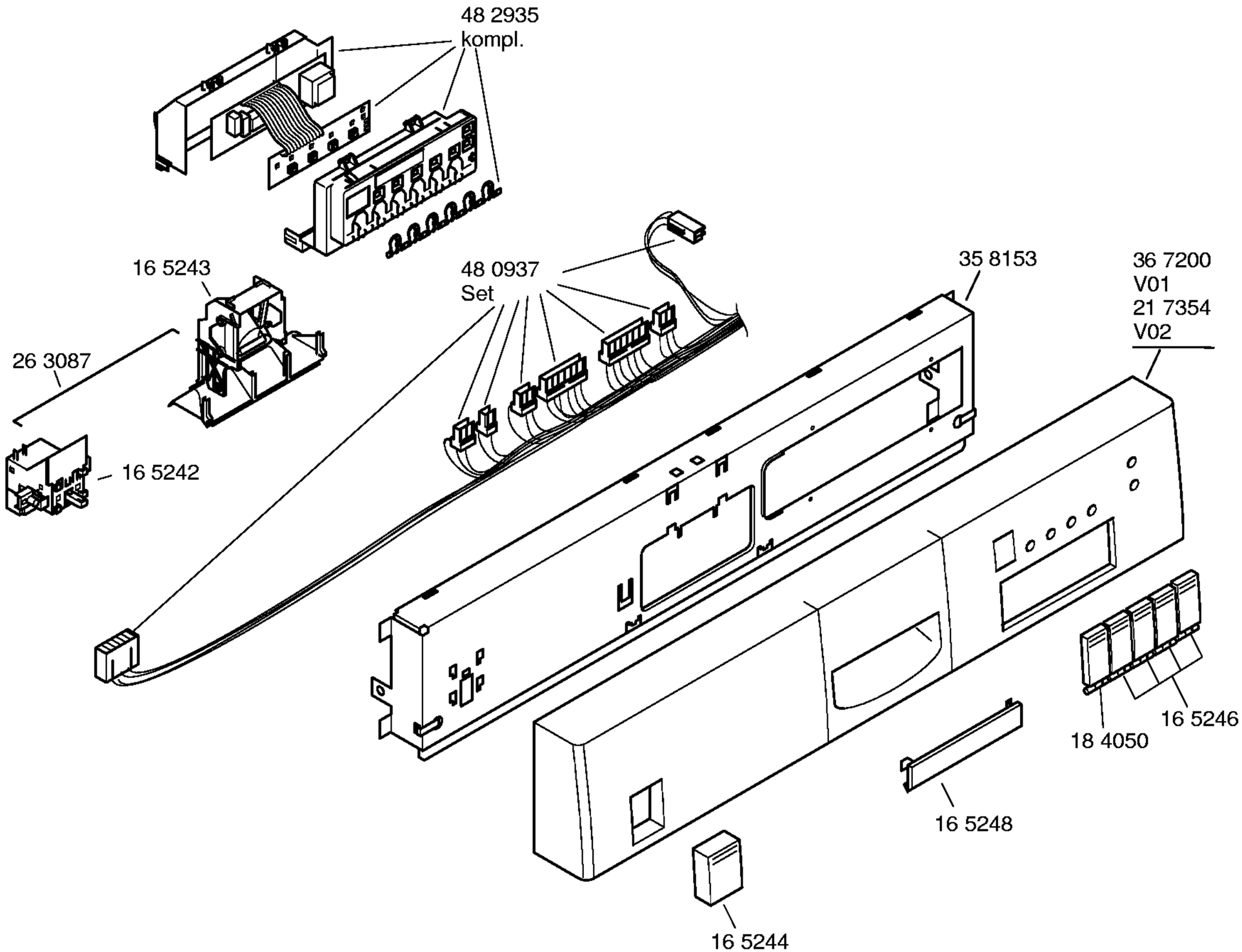

Mat. – Nr. – Konstante
3740 . . . . . .

Gebrauchsanweisung:
58 1325
es,pt
58 1326
dk
58 4014
de

Zubehör:
Entkalker
46 0038

Verlg. Aqua–Stop
Kunststoffrohr 2,2 m
Ablaufschl. 1,95m
SGZ 1010

Kupferrohr
∅ 10 mm / 1,5 m
SMZ3005

Messerkas.–Backbl.–
Düse
SGZ 1000

Silberbesteckkorb
SGZ2003

Copyright © (2009) by Bosch / ESHOP_7_2

Mat. – Nr. – Konstante
3740 . . . . . .

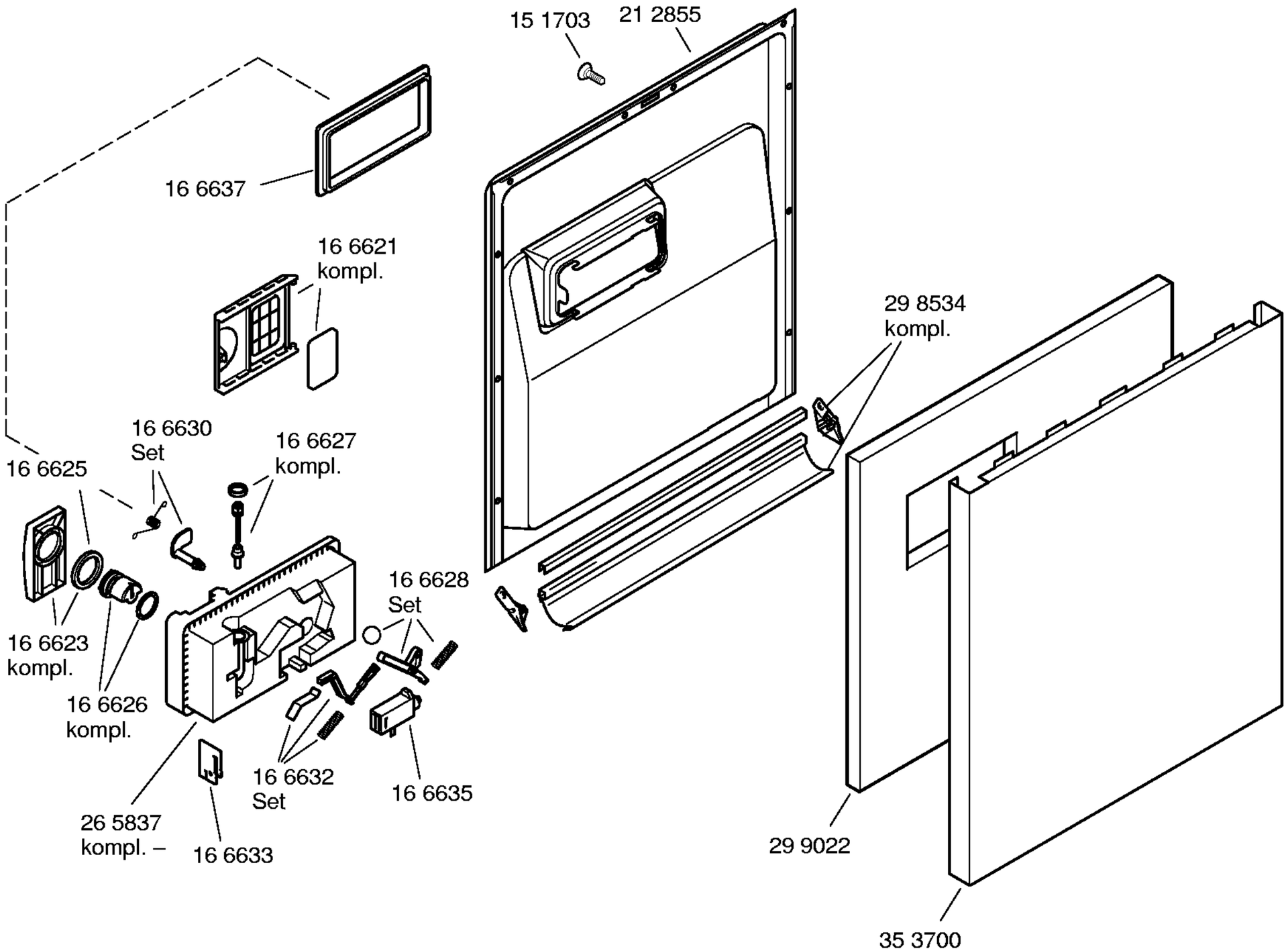

Copyright © (2009) by Bosch / ESHOP_7_2

Mat. – Nr. – Konstante
3740 . . . . . .

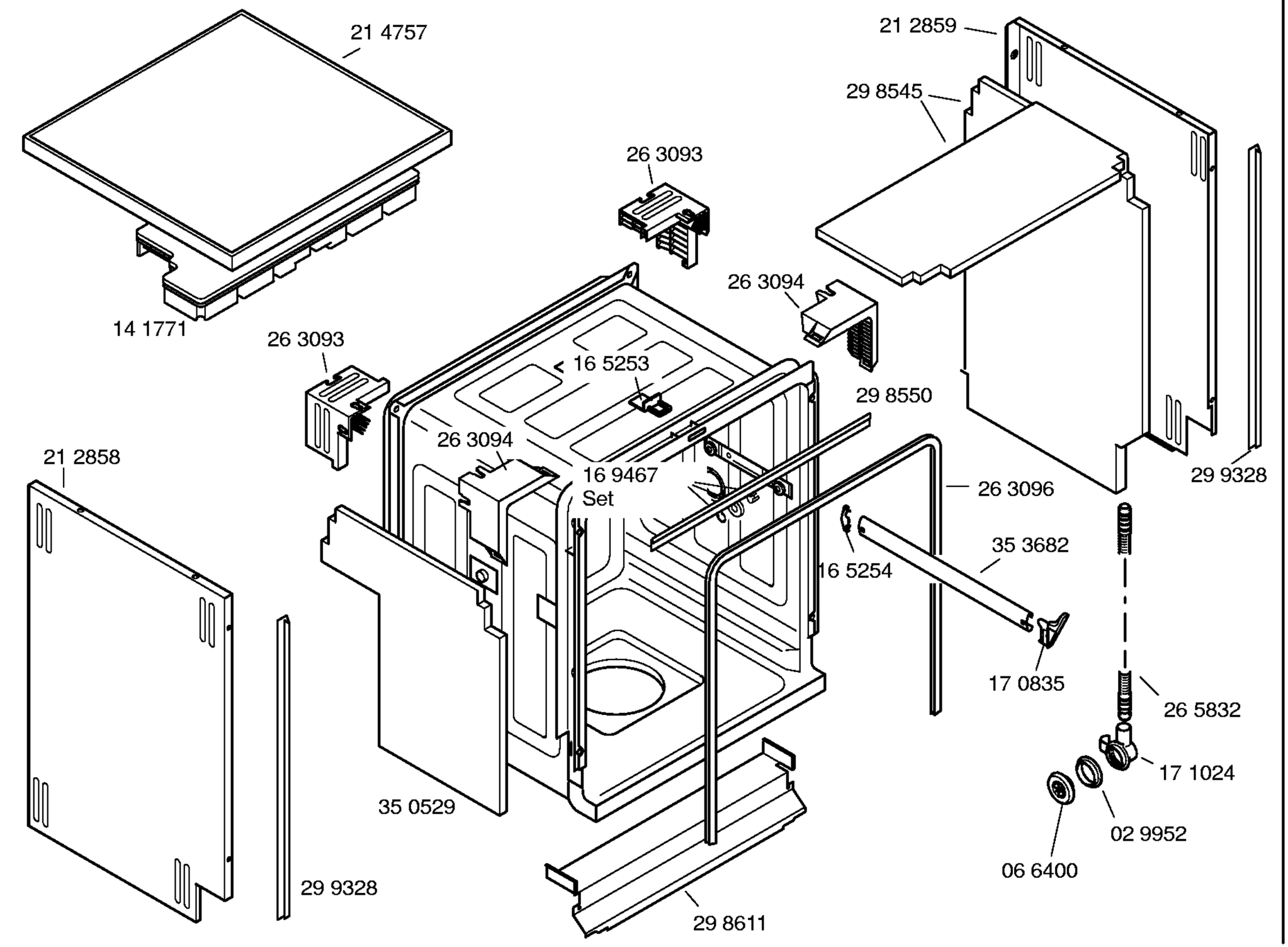

AET58306 0 0095169000

Copyright © (2009) by Bosch / ESHOP_7_2

Mat. – Nr. – Konstante
3740 . . . . . .

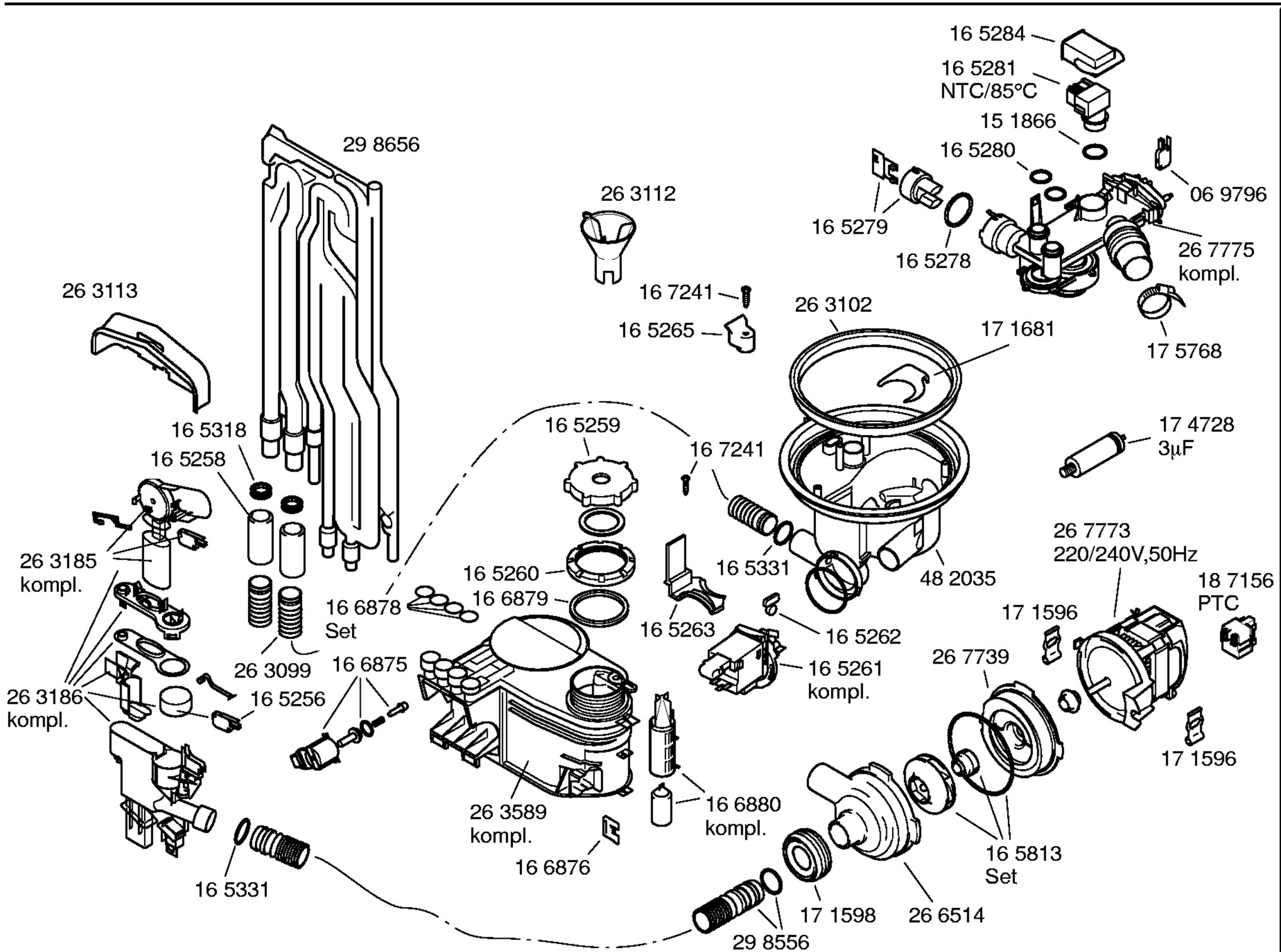

AET58306040095169000

Copyright © (2009) by Bosch / ESHOP_7_2

Mat. – Nr. – Konstante
3740 . . . . . .

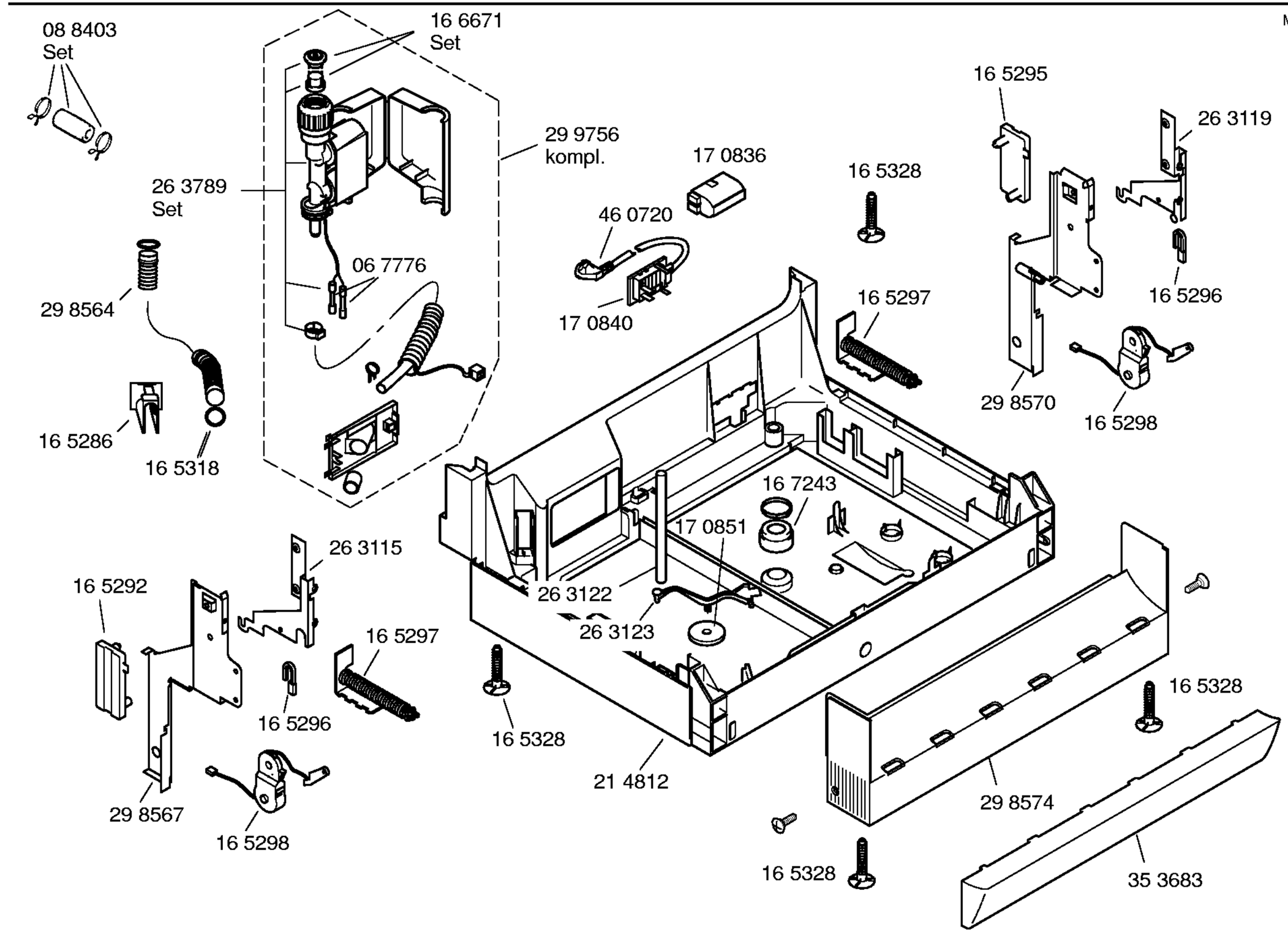

Copyright © (2009) by Bosch / ESHOP_7_2

Mat. – Nr. – Konstante
3740 . . . . . .

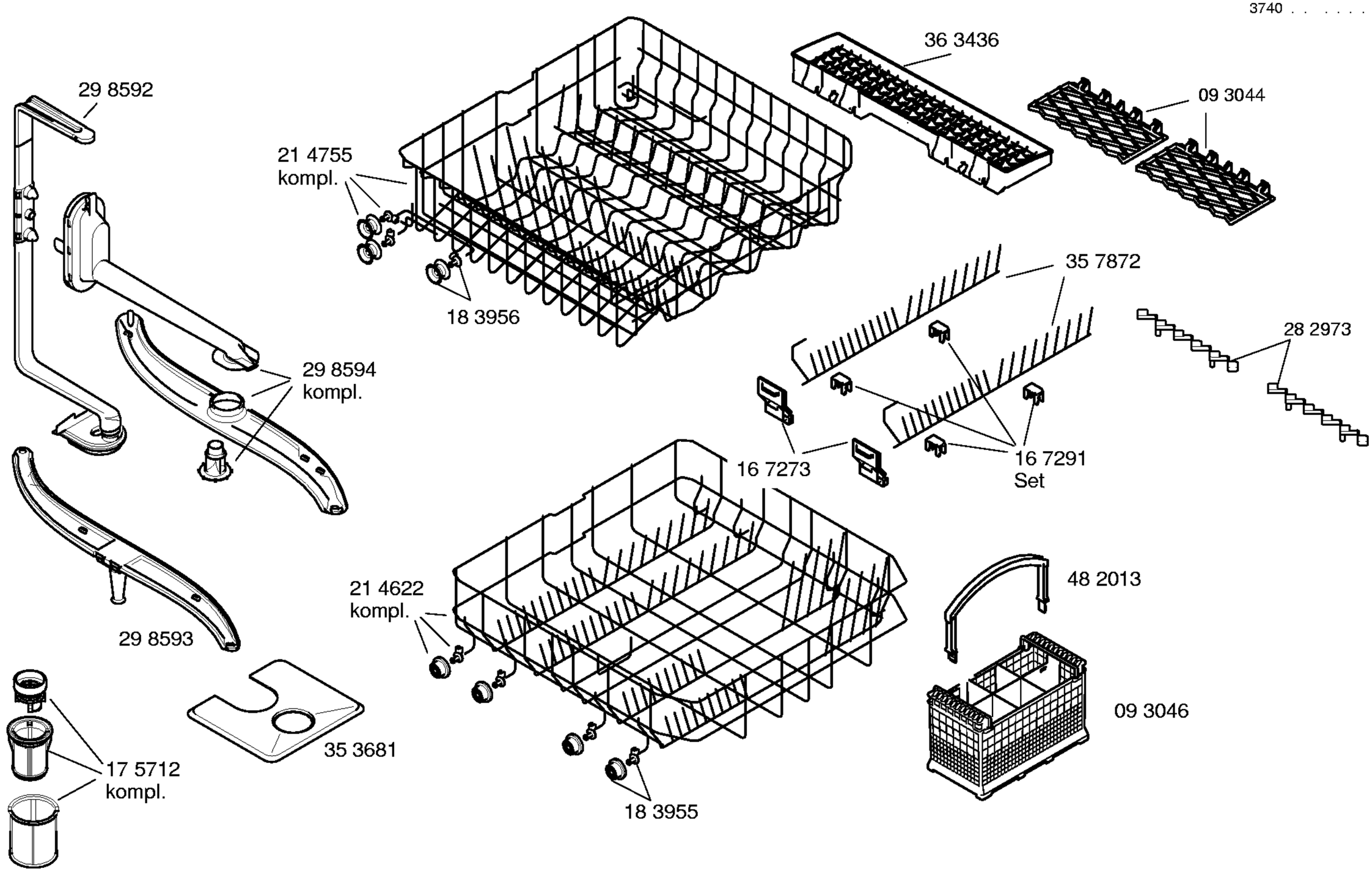

Copyright © (2009) by Bosch / ESHOP_7_2