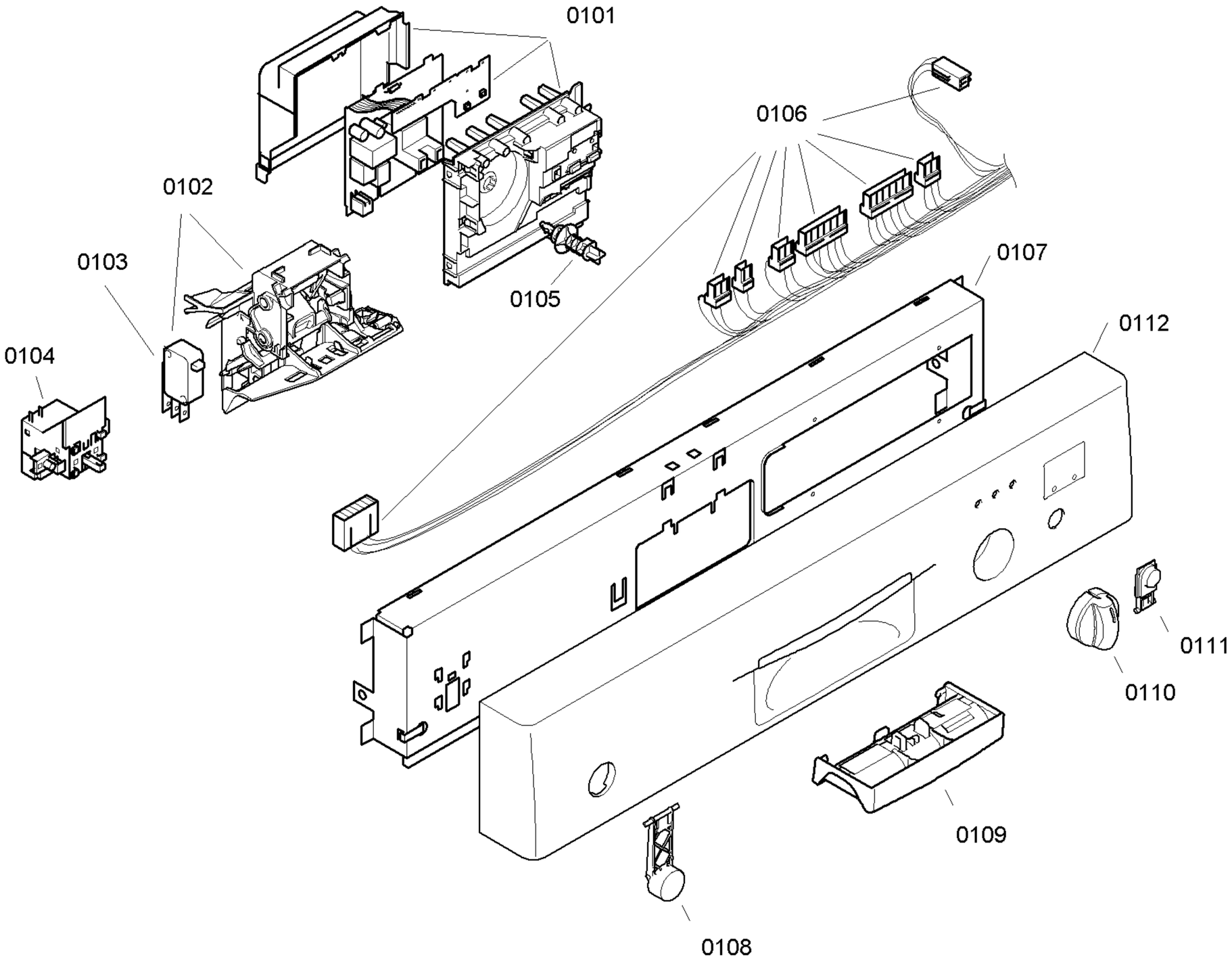

Copyright © (2012) by Bosch / 205502

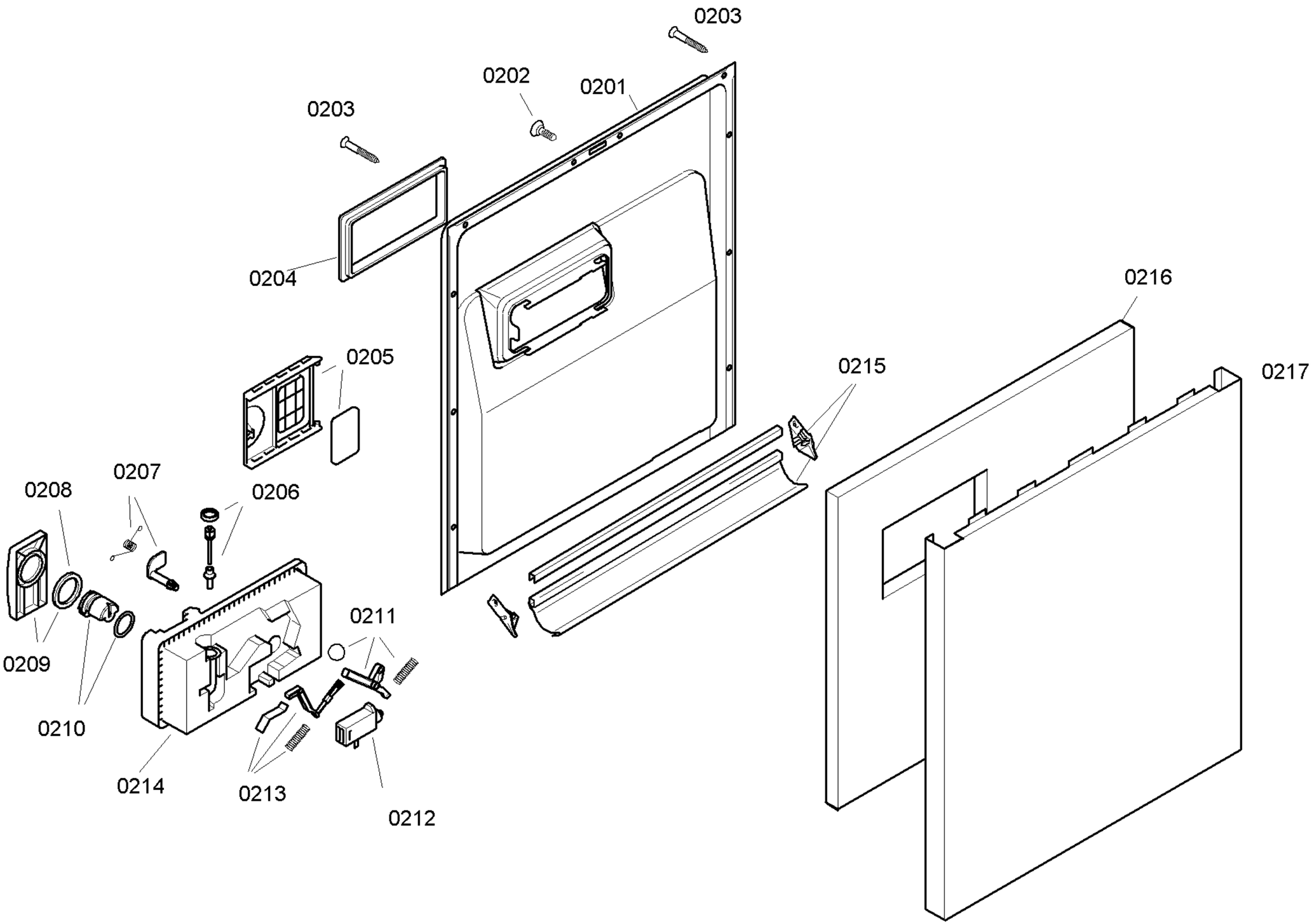

Copyright © (2012) by Bosch / 205502

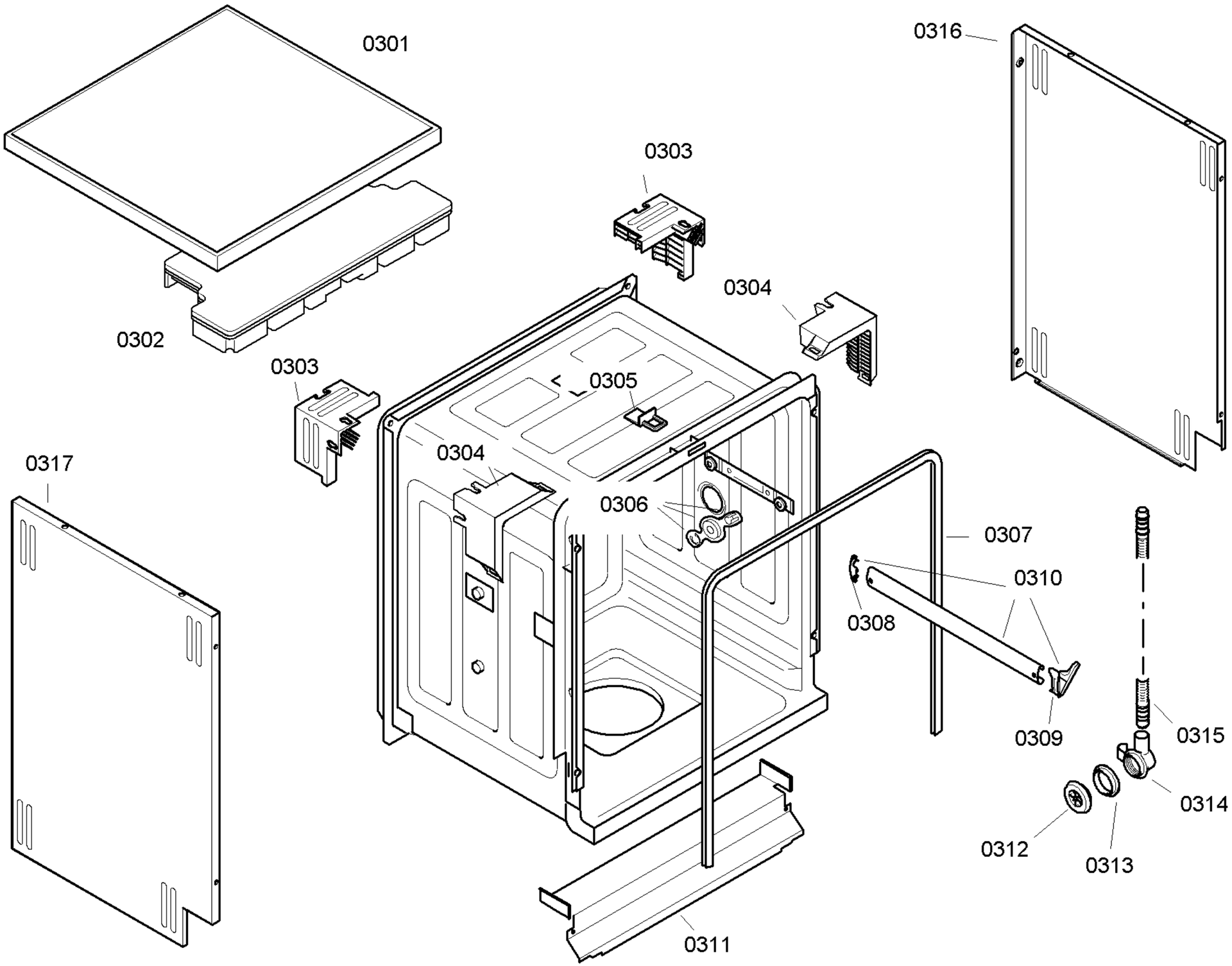

Copyright © (2012) by Bosch / 205502

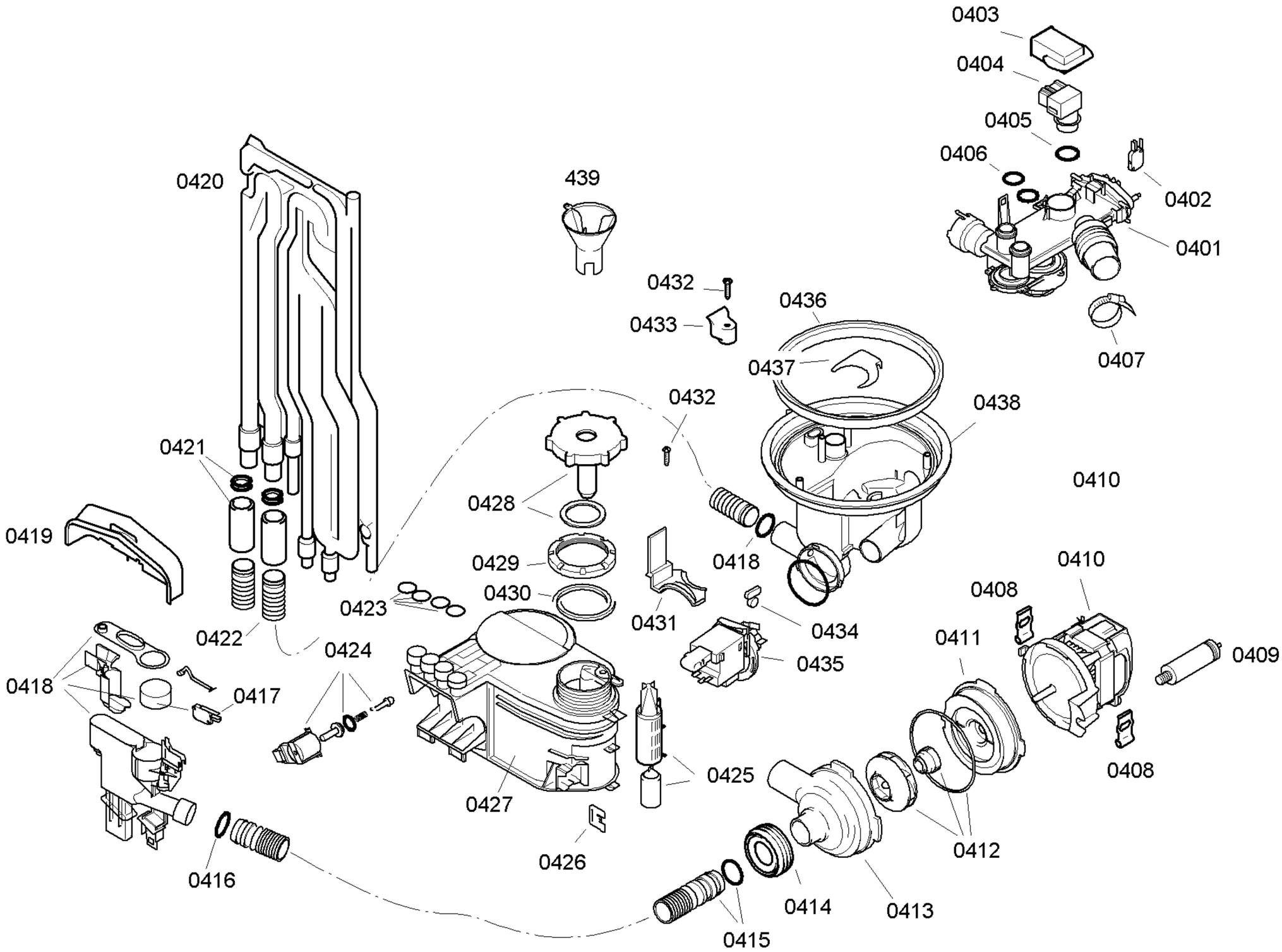

Copyright © (2012) by Bosch / 205502

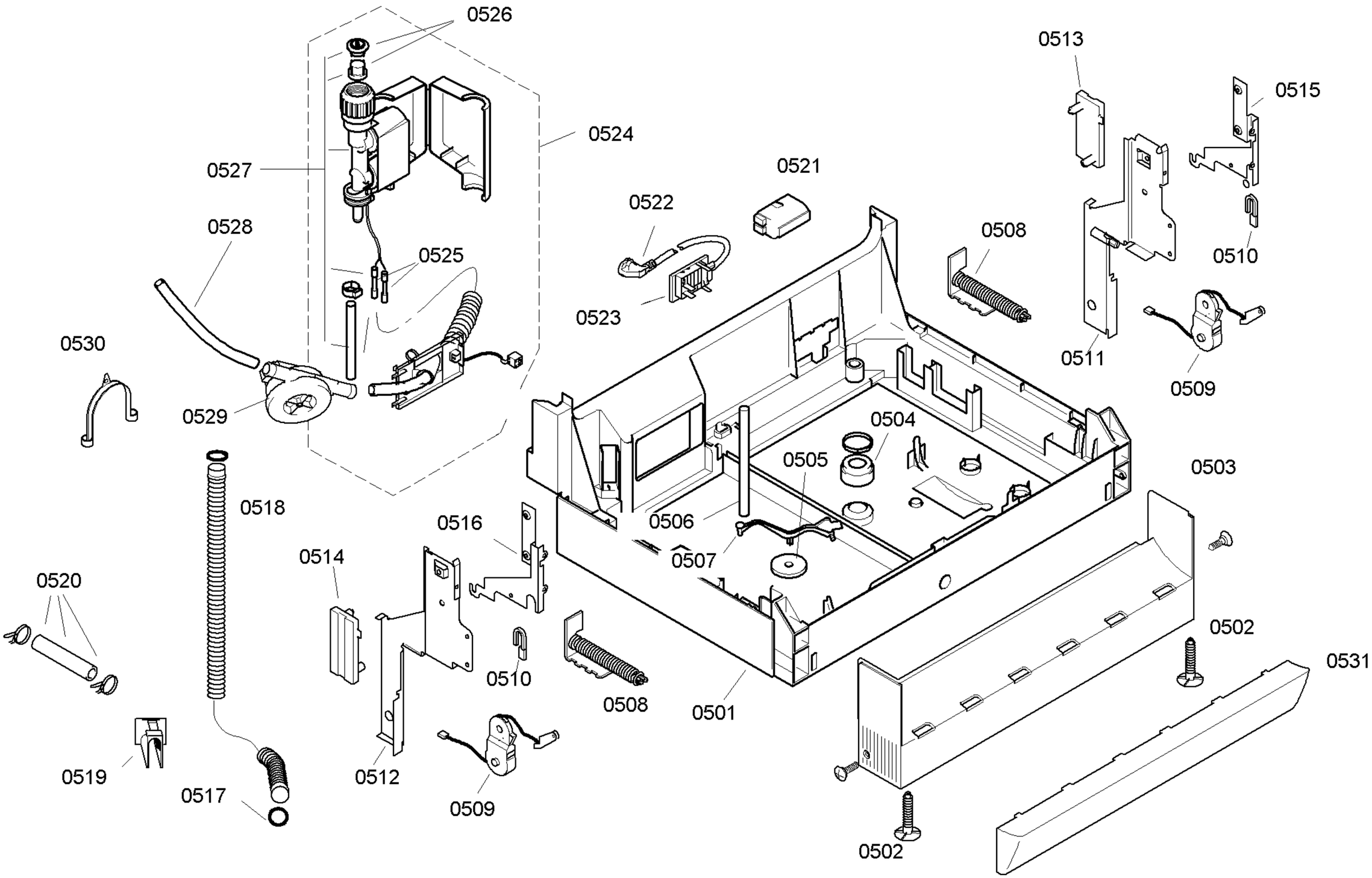

Copyright © (2012) by Bosch / 205502

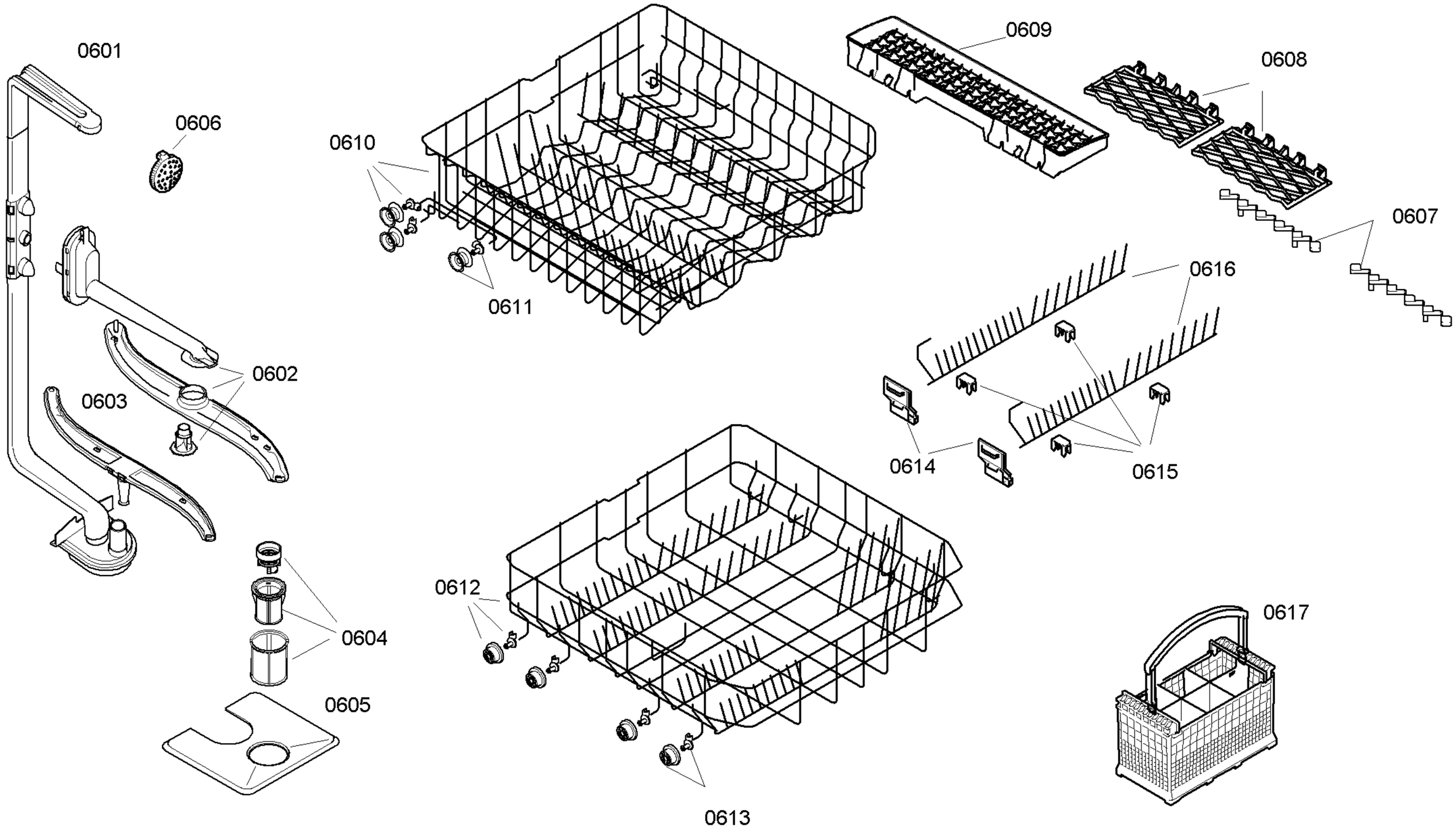

Copyright © (2012) by Bosch / 205502