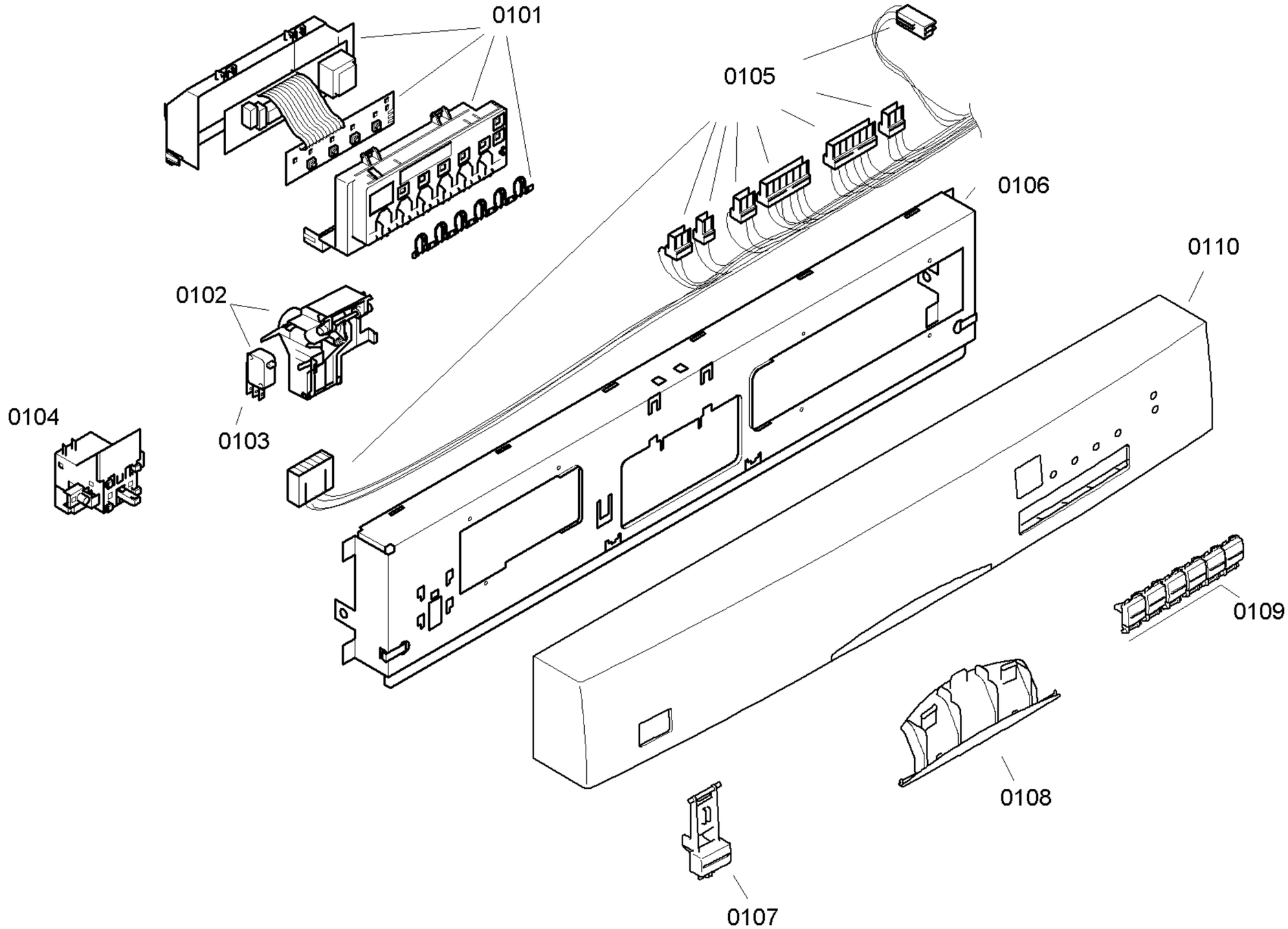

Copyright © (2009) by Bosch / ESHOP_7_2

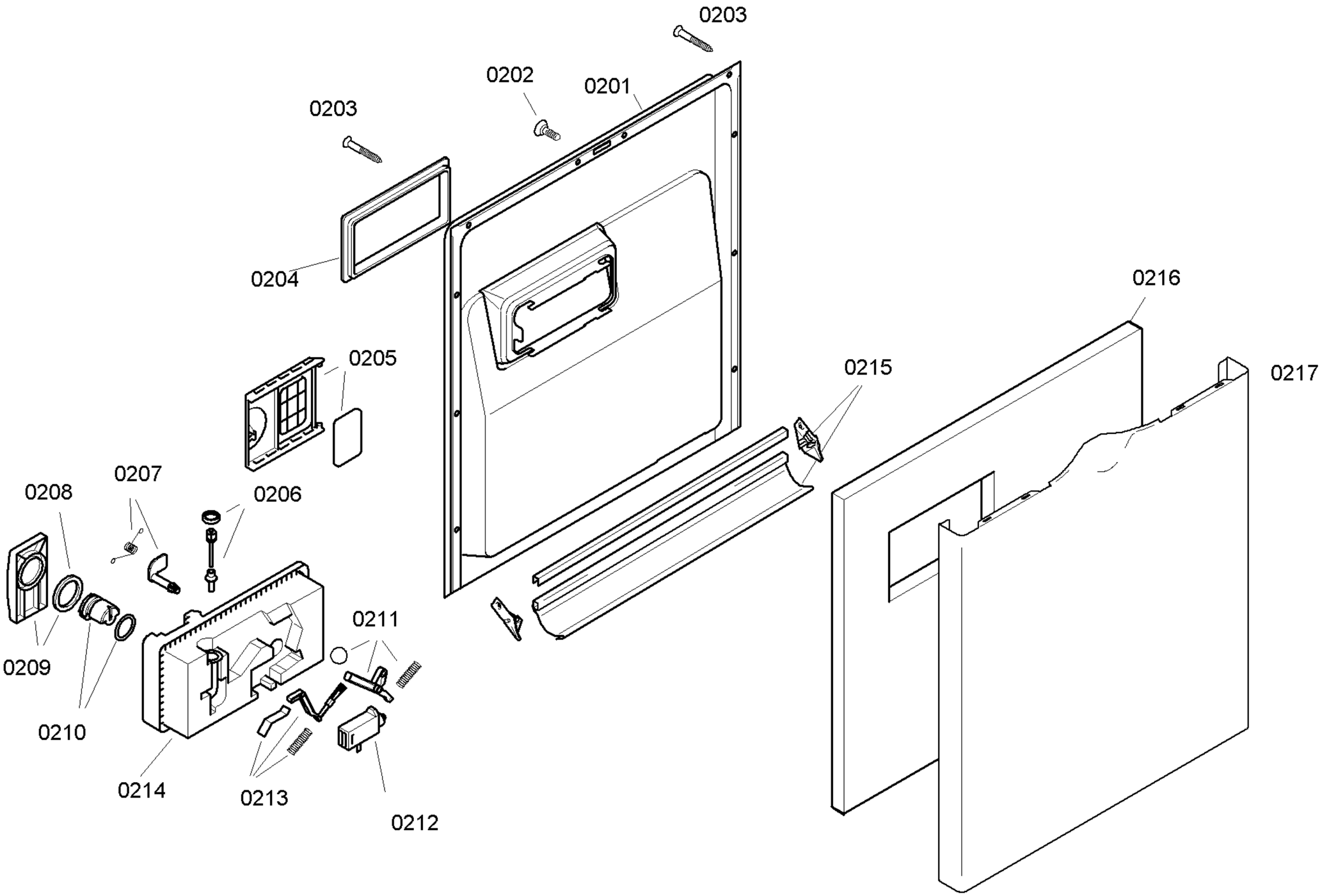

Copyright © (2009) by Bosch / ESHOP_7_2

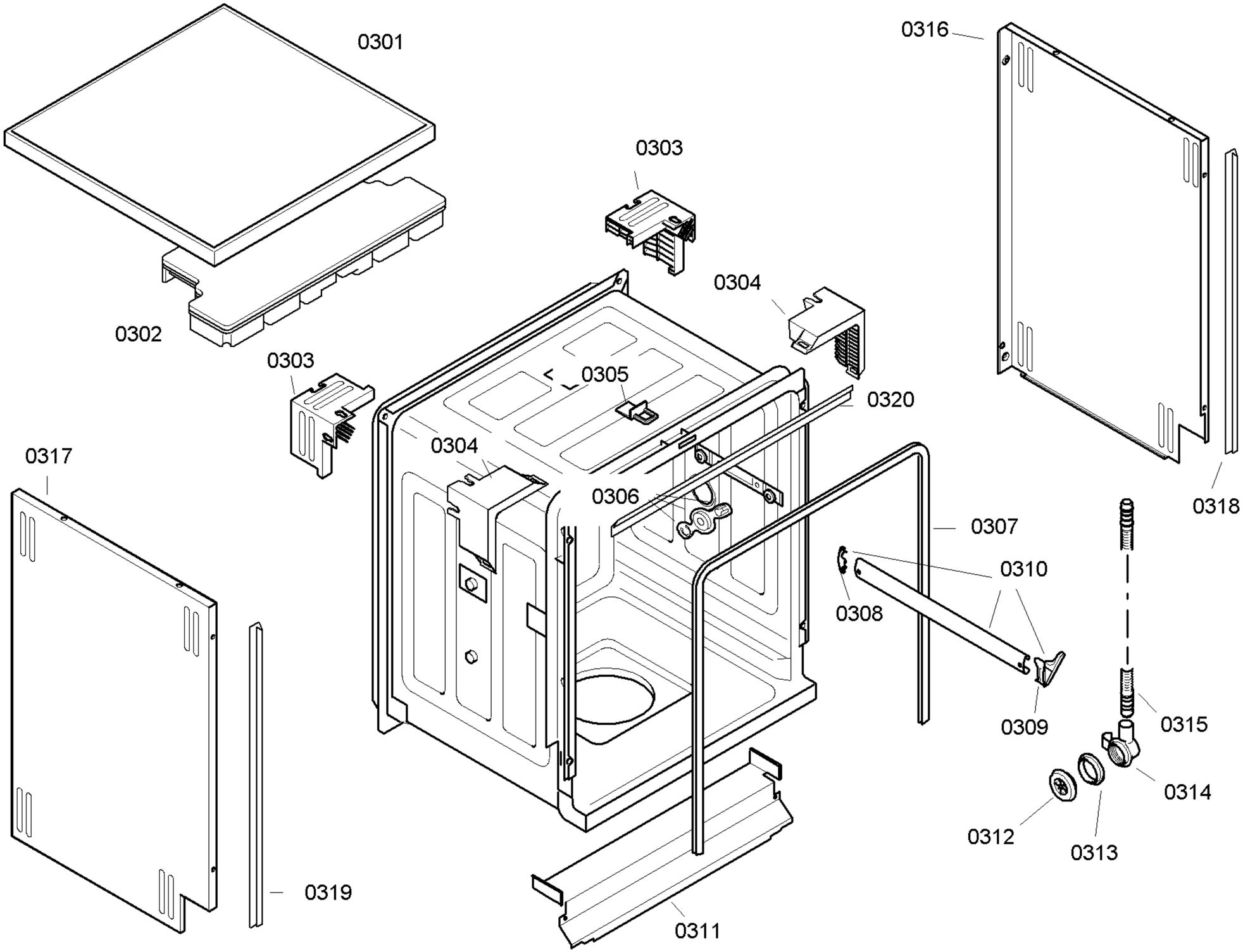

58300000116582 aet 000 b 3/6

Copyright © (2009) by Bosch / ESHOP_7_2

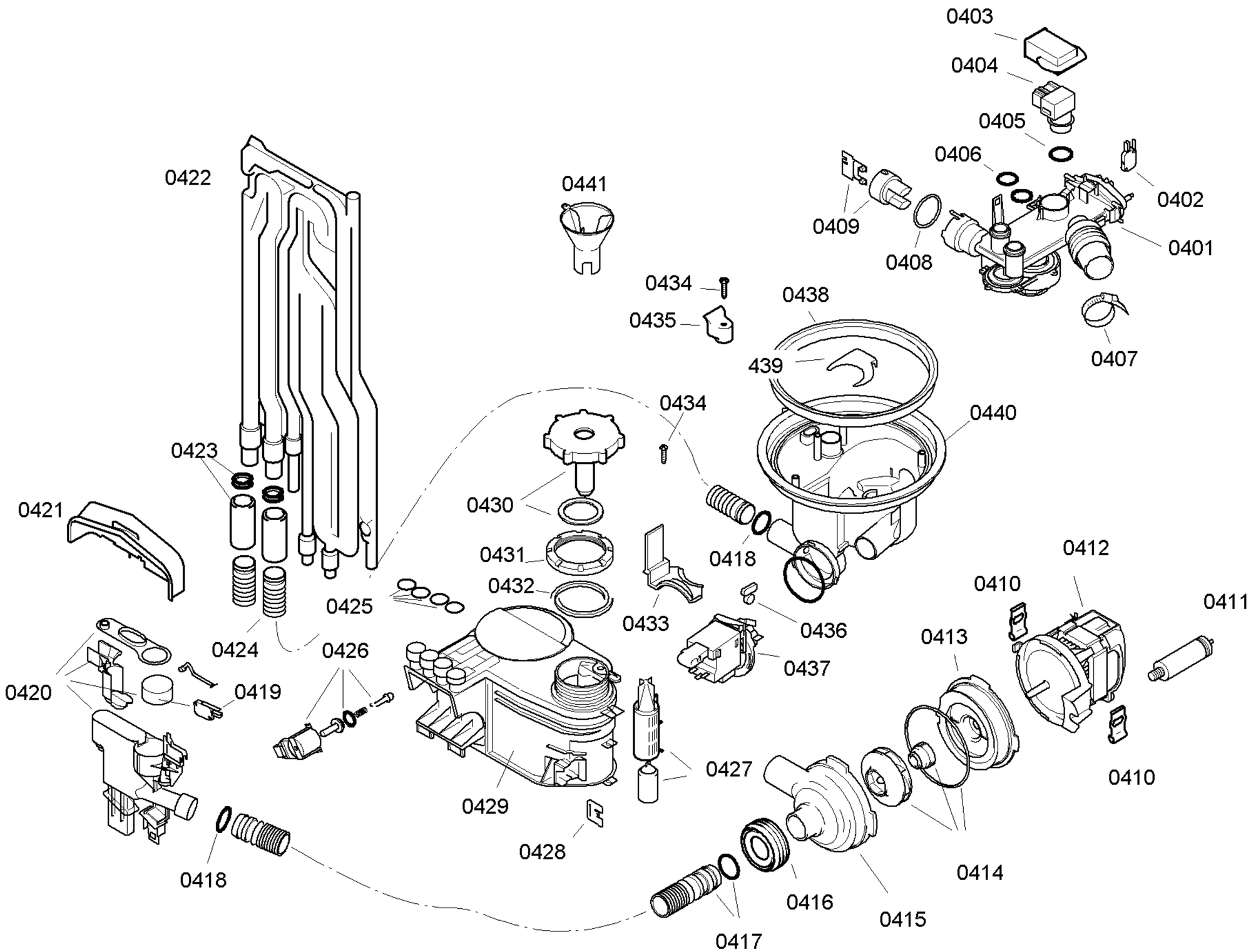

Copyright © (2009) by Bosch / ESHOP_7_2

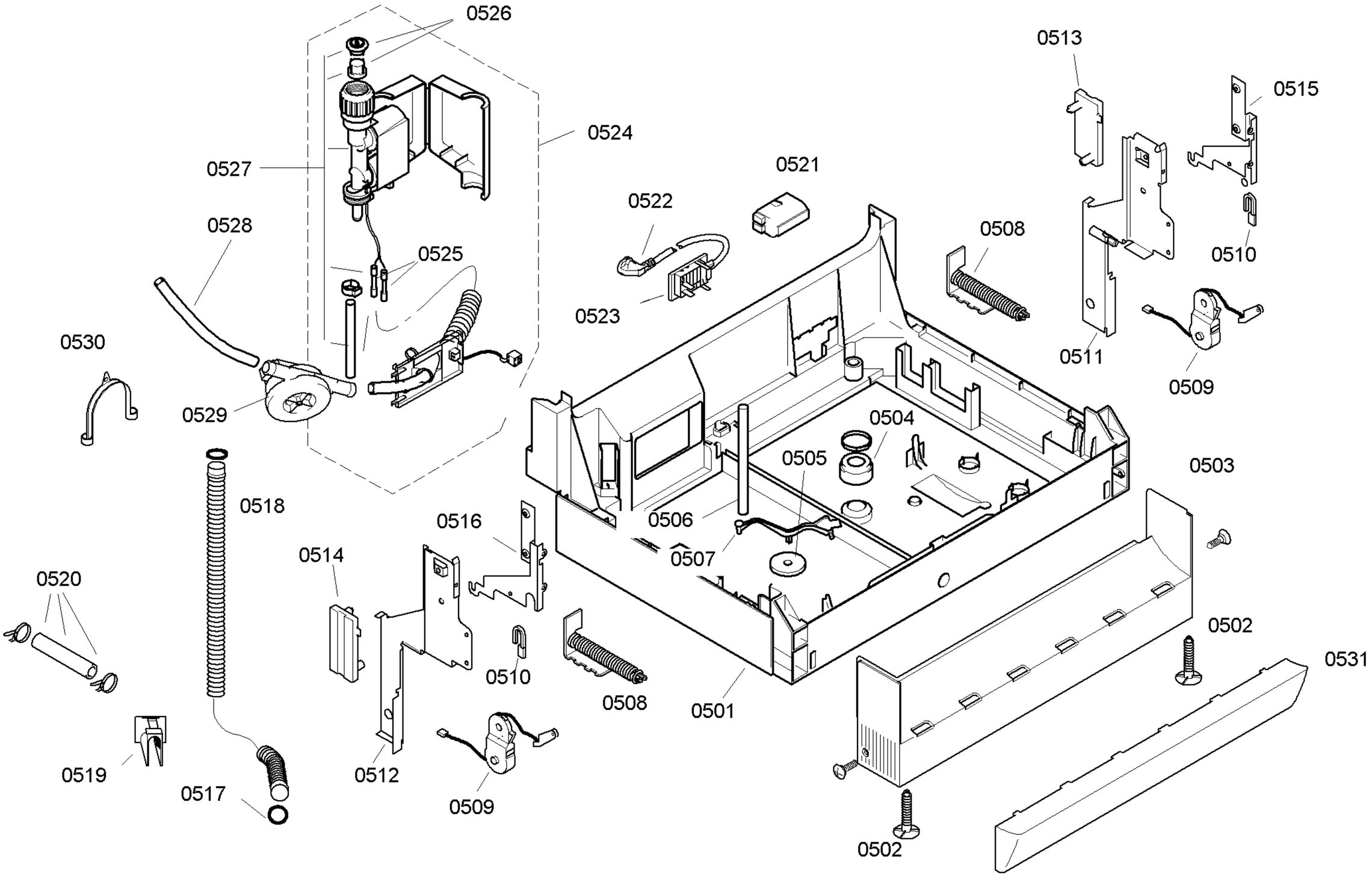

Copyright © (2009) by Bosch / ESHOP_7_2

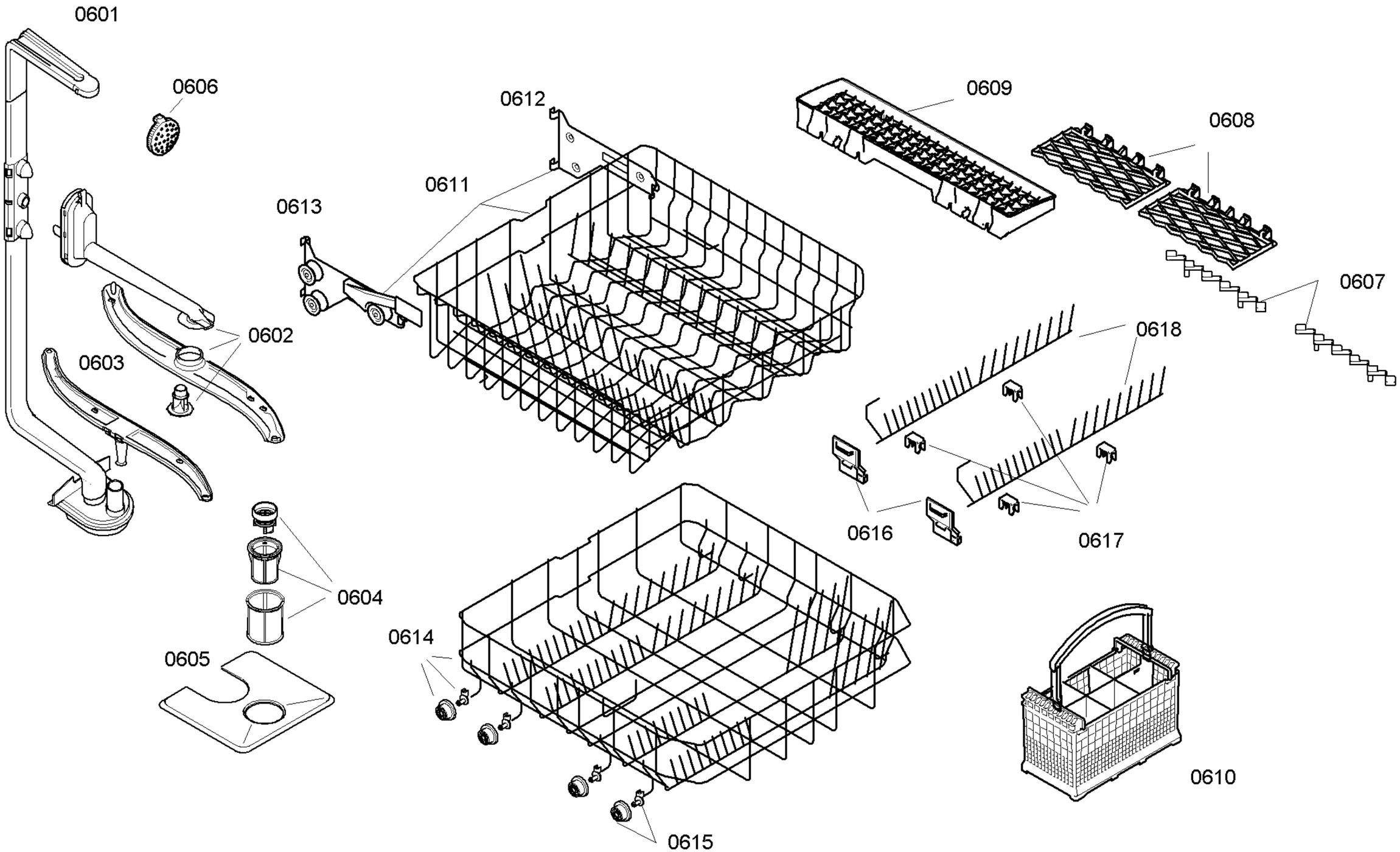

Copyright © (2009) by Bosch / ESHOP_7_2