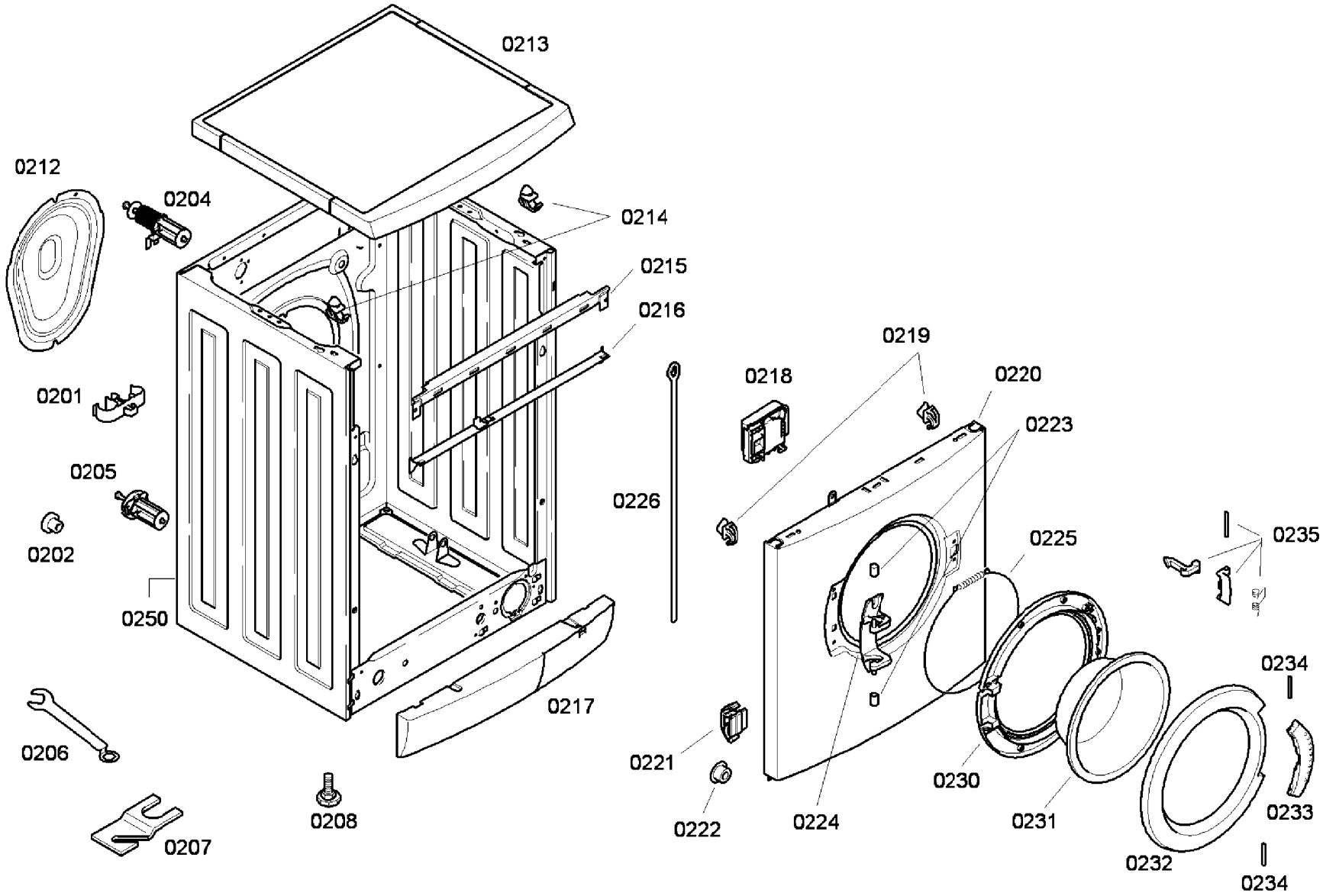




Copyright © ( 2012 ) by Bosch / 205502

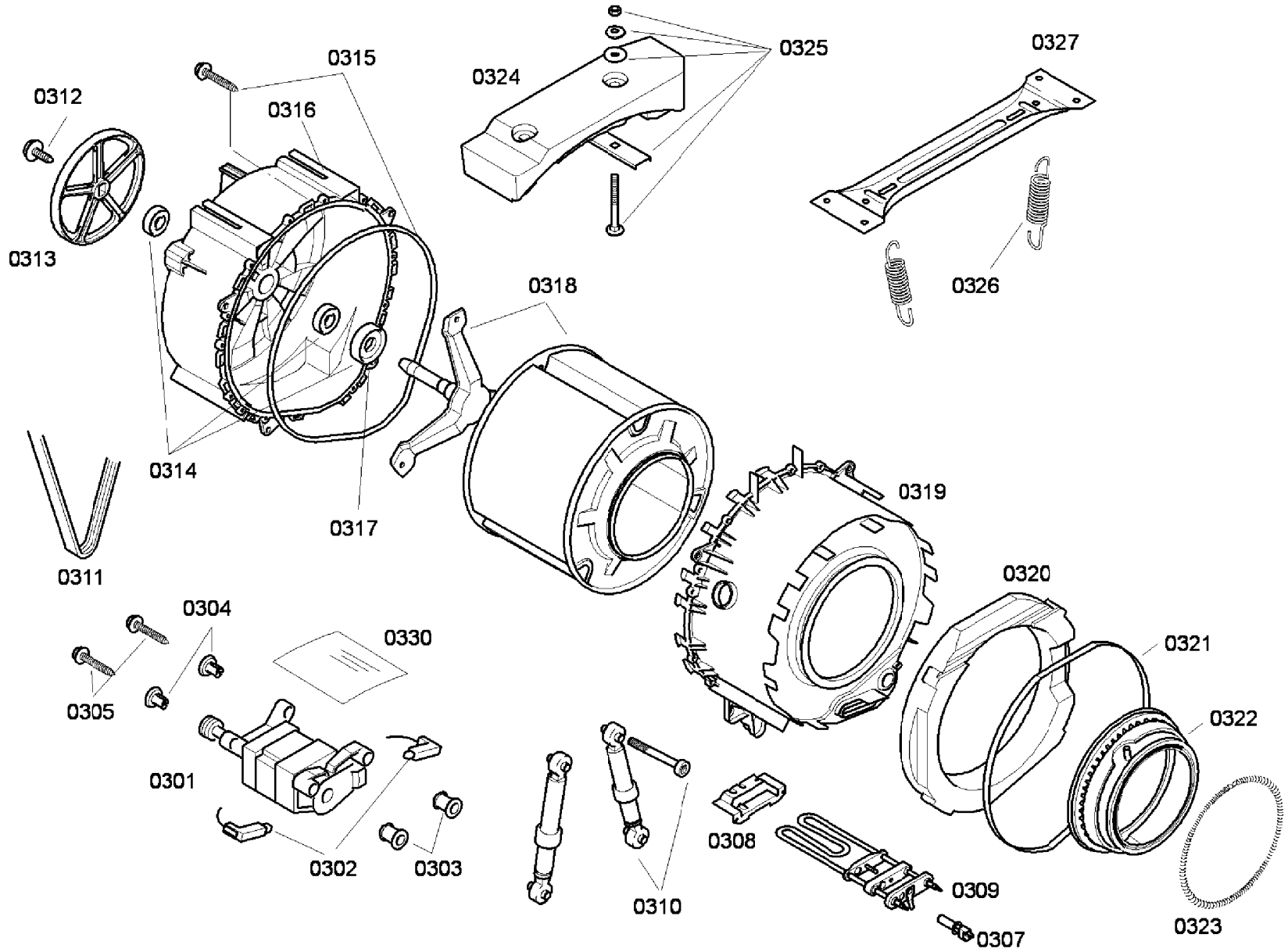




Copyright © ( 2012 ) by Bosch / 205502