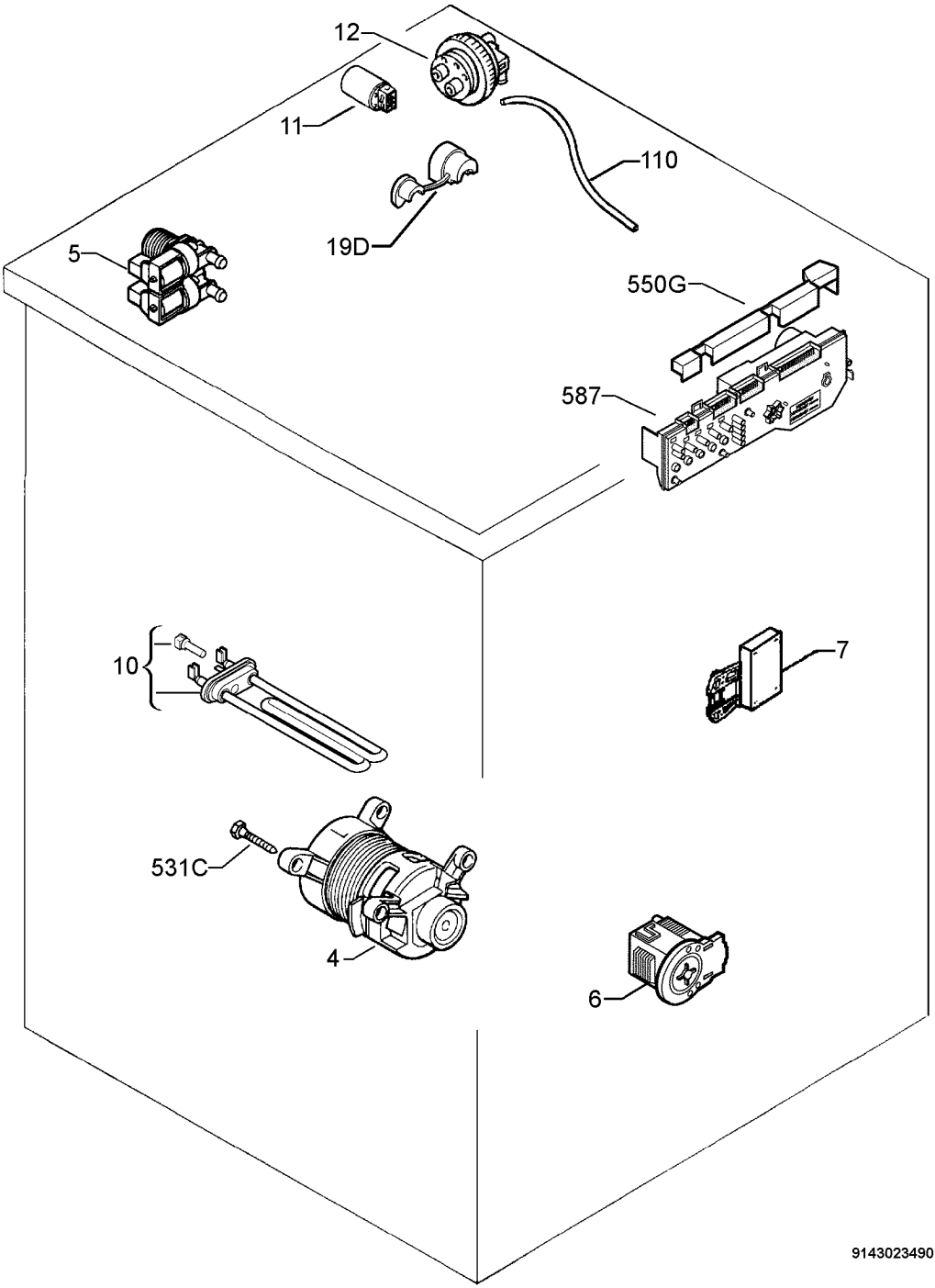
12
11
110
19D
5
550G
587
10
7
531C
4
6
9143023490