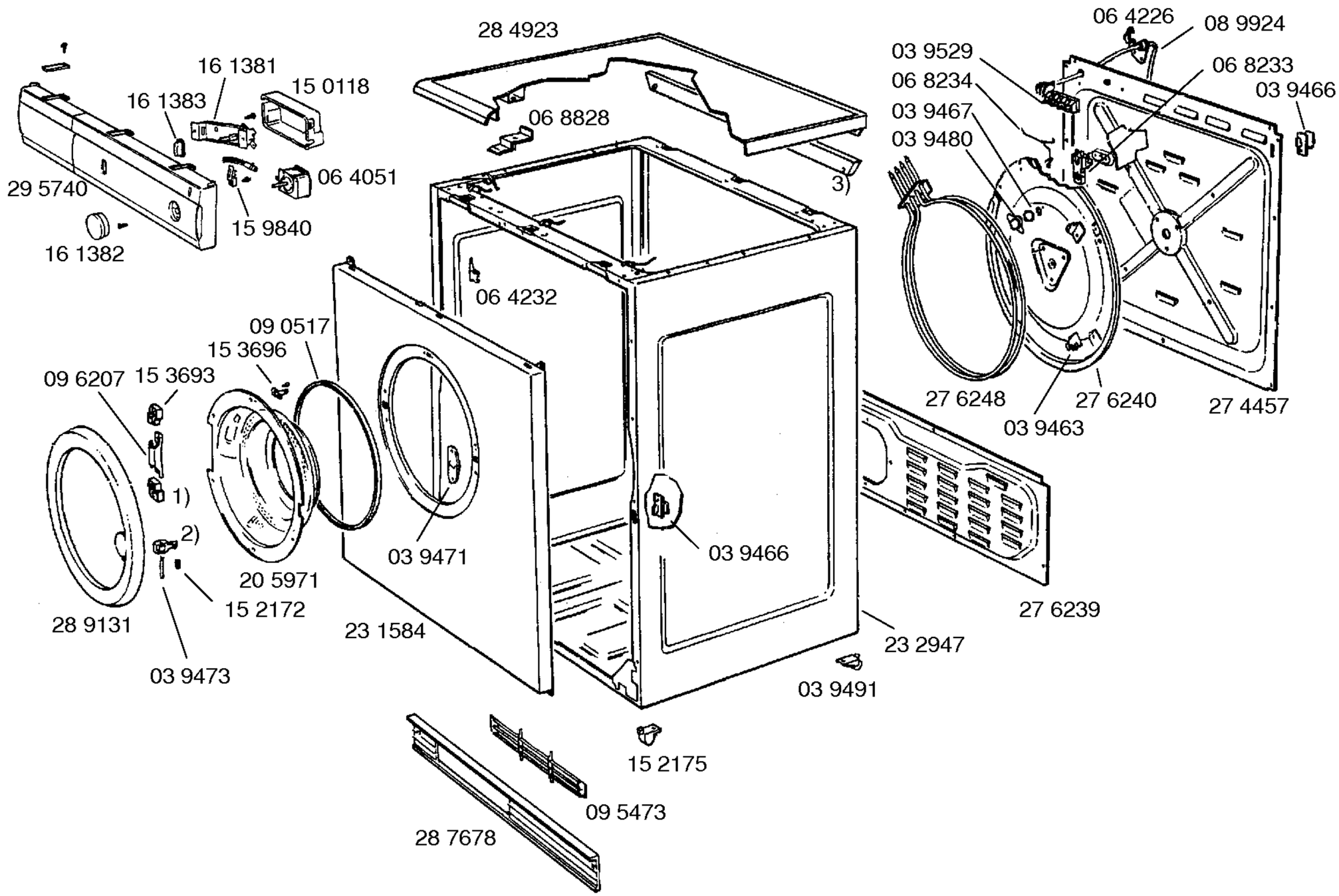

Libro de instrucciones
52 0518
(E,P)

1) 15 3694
2) 15 3695
3) 28 4927

Copyright © (2017) by Crolls / 205502

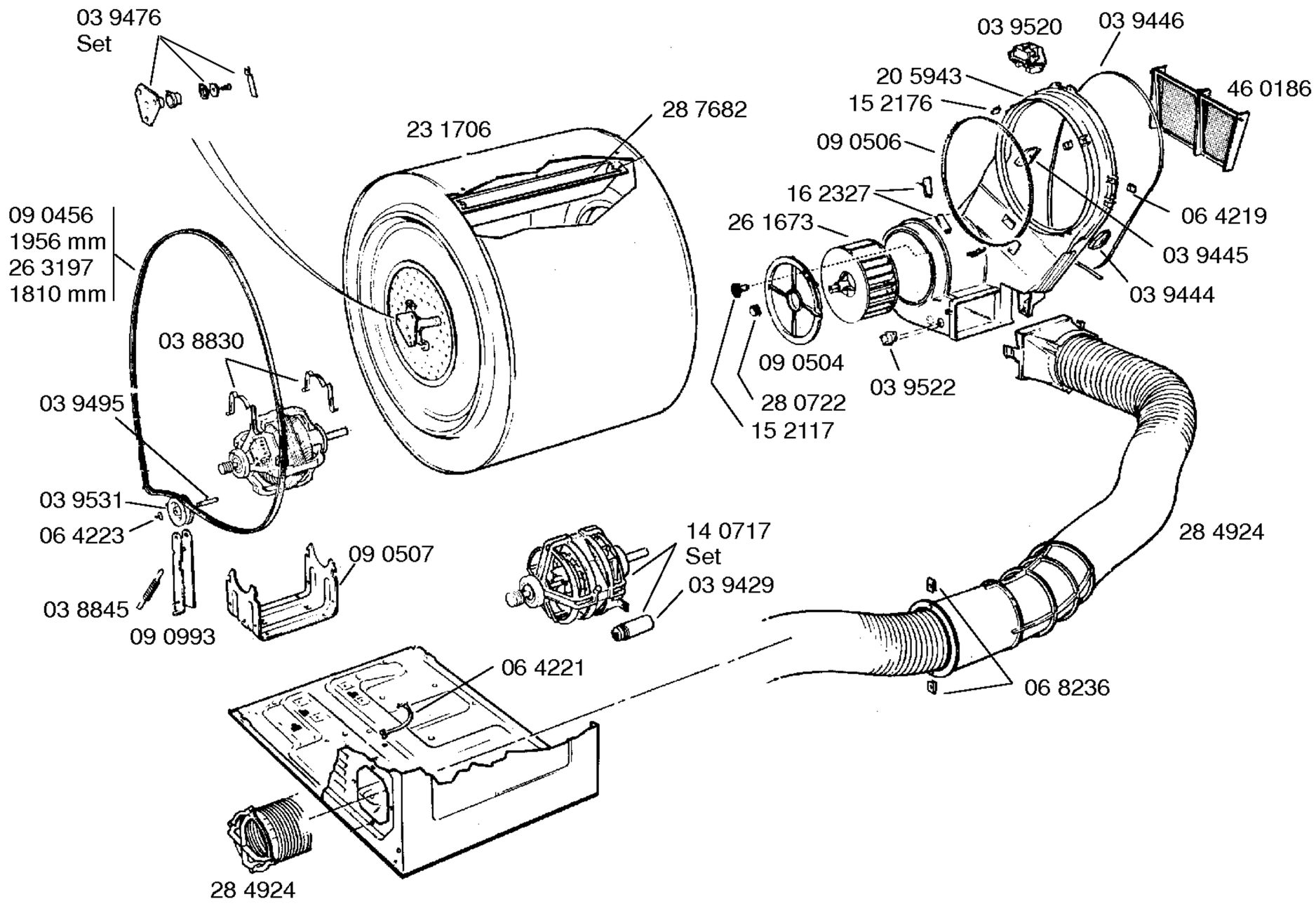

Copyright © (2017) by Crolls / 205502