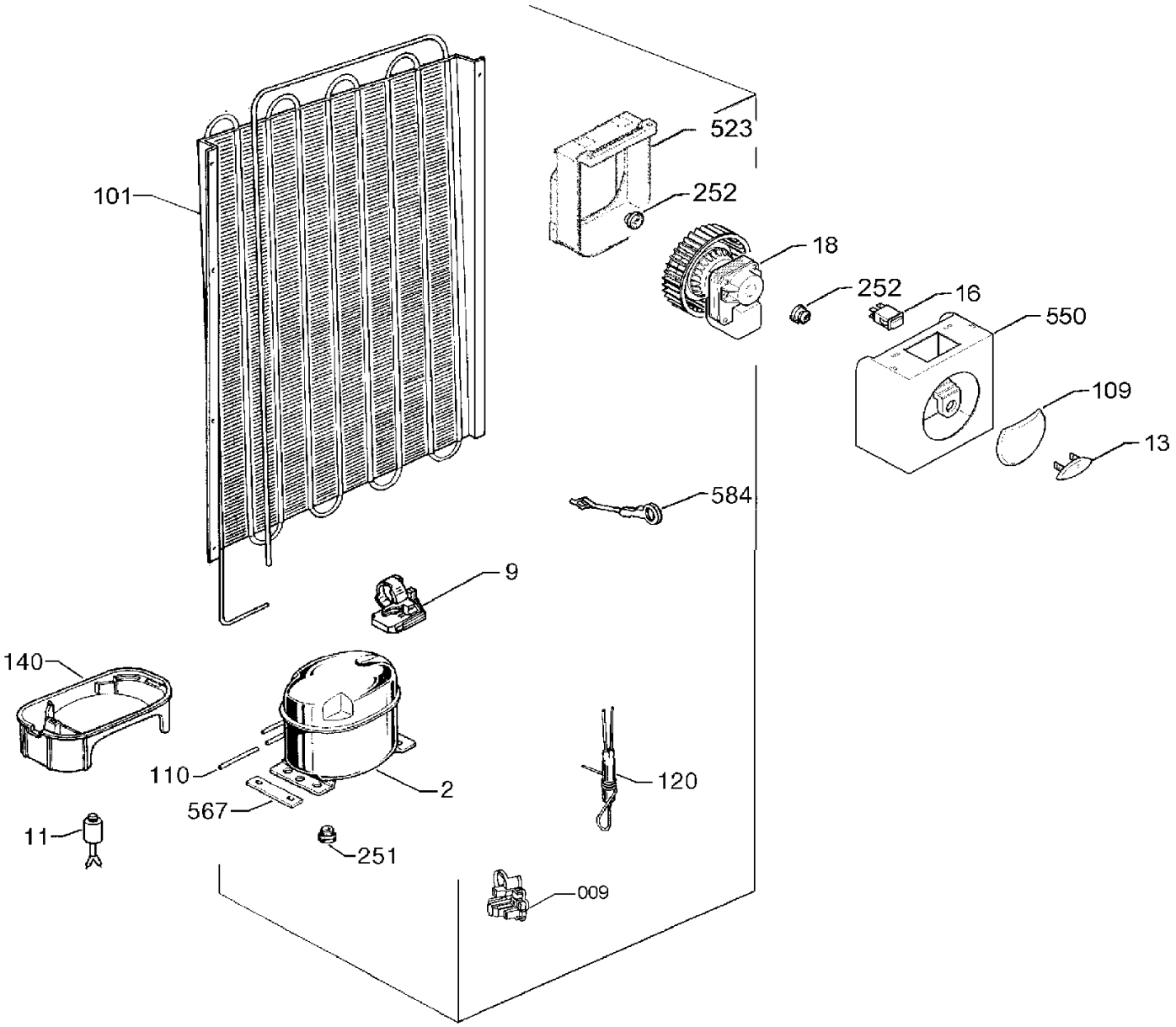

Owned by an entity of FAGOR GROUP / Copy prohibided EL4-019

Owned by an entity of FAGOR GROUP / Copy prohibided Nº 23620

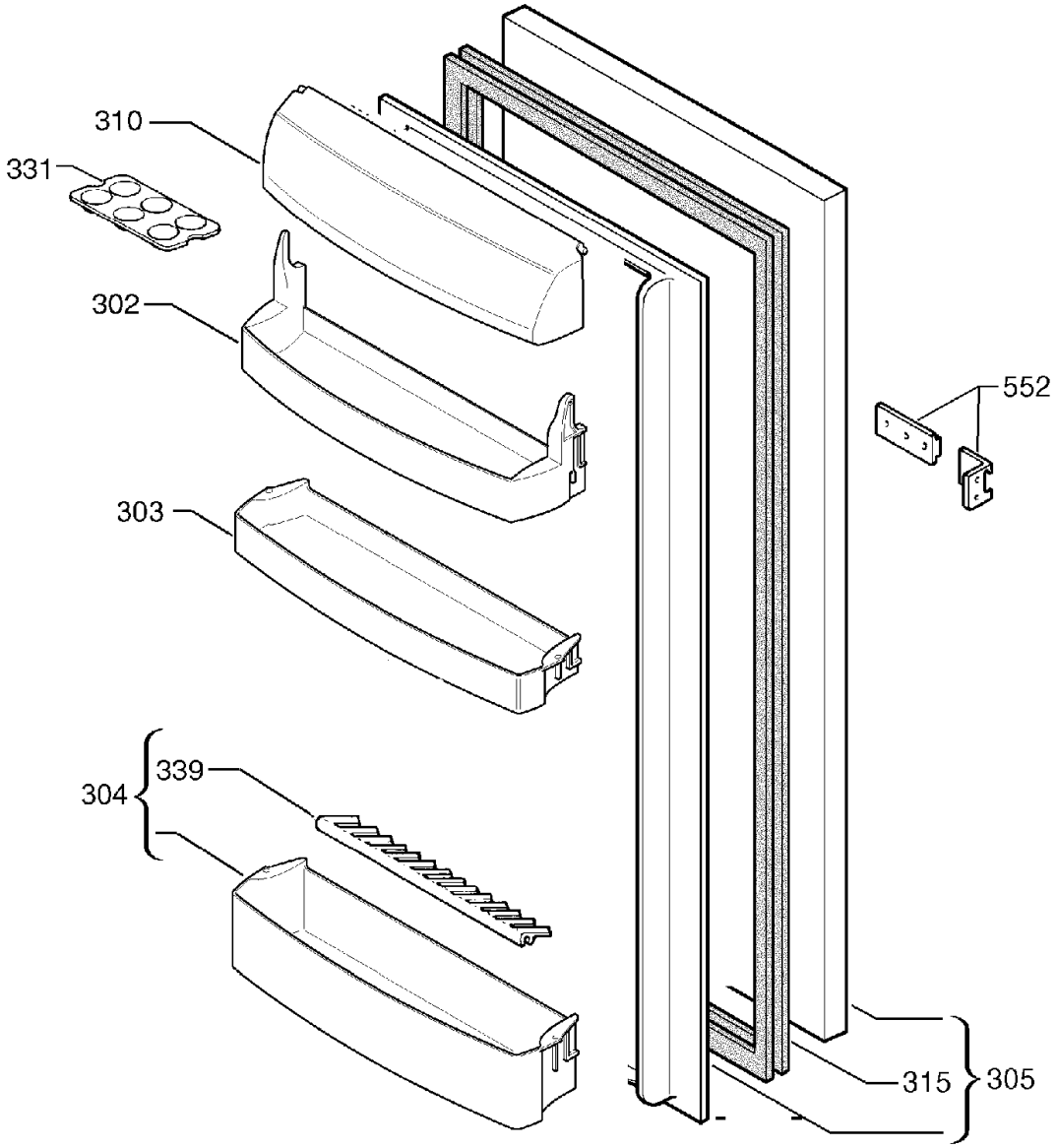

Owned by an entity of FAGOR GROUP / Copy prohibided EL3-017

Owned by an entity of FAGOR GROUP / Copy prohibided Nº 23621

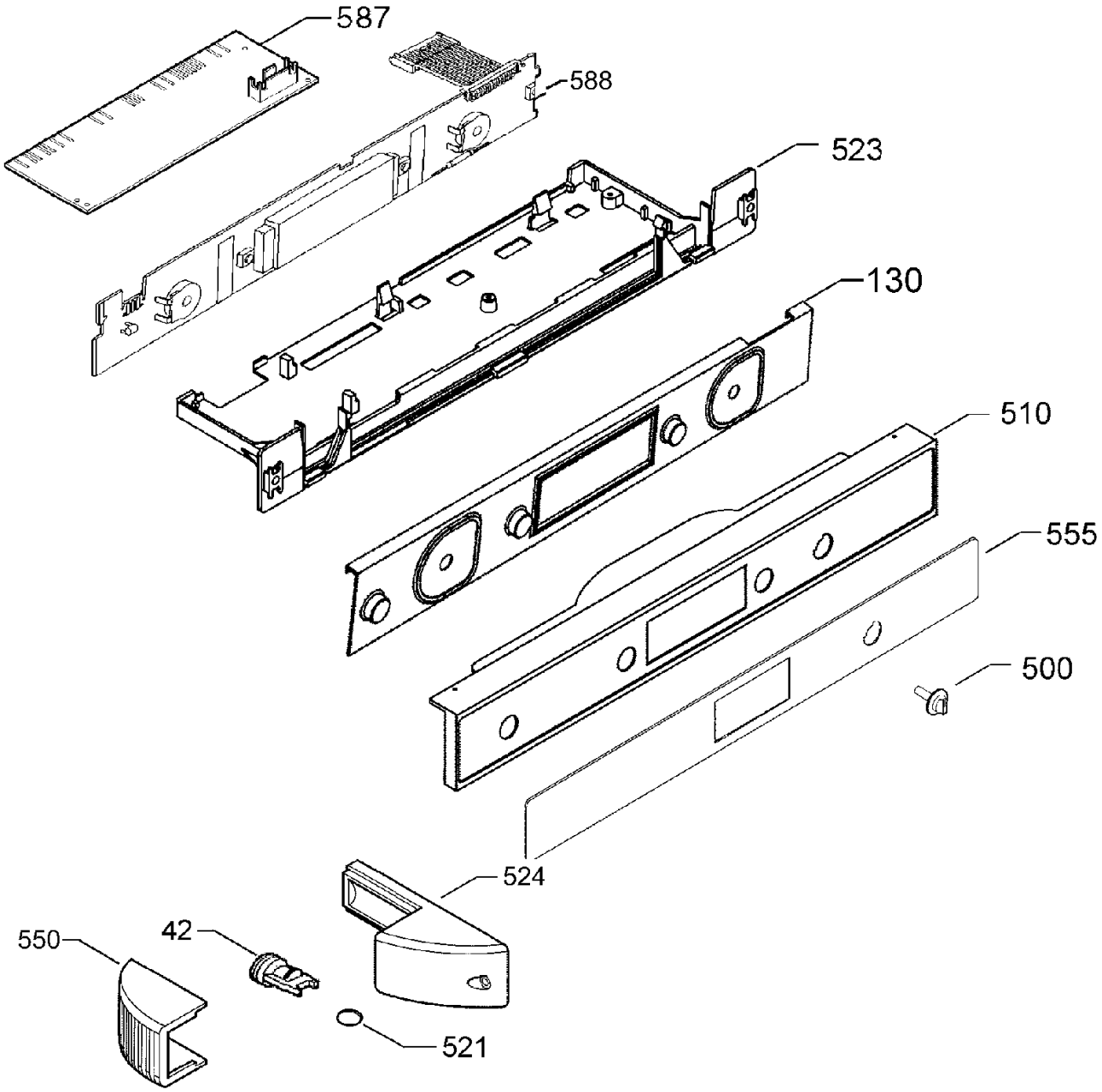

Owned by an entity of FAGOR GROUP / Copy prohibided EL2-018

Owned by an entity of FAGOR GROUP / Copy prohibided Nº 23622

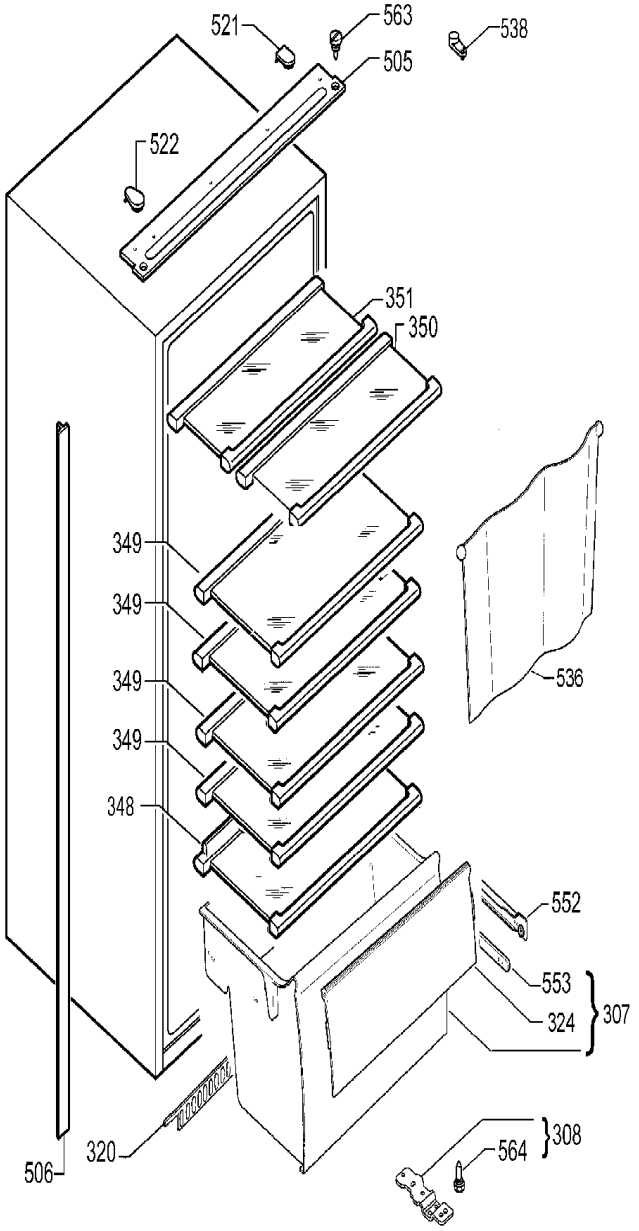

Owned by an entity of FAGOR GROUP / Copy prohibided EL1-019

Owned by an entity of FAGOR GROUP / Copy prohibided Nº 23623