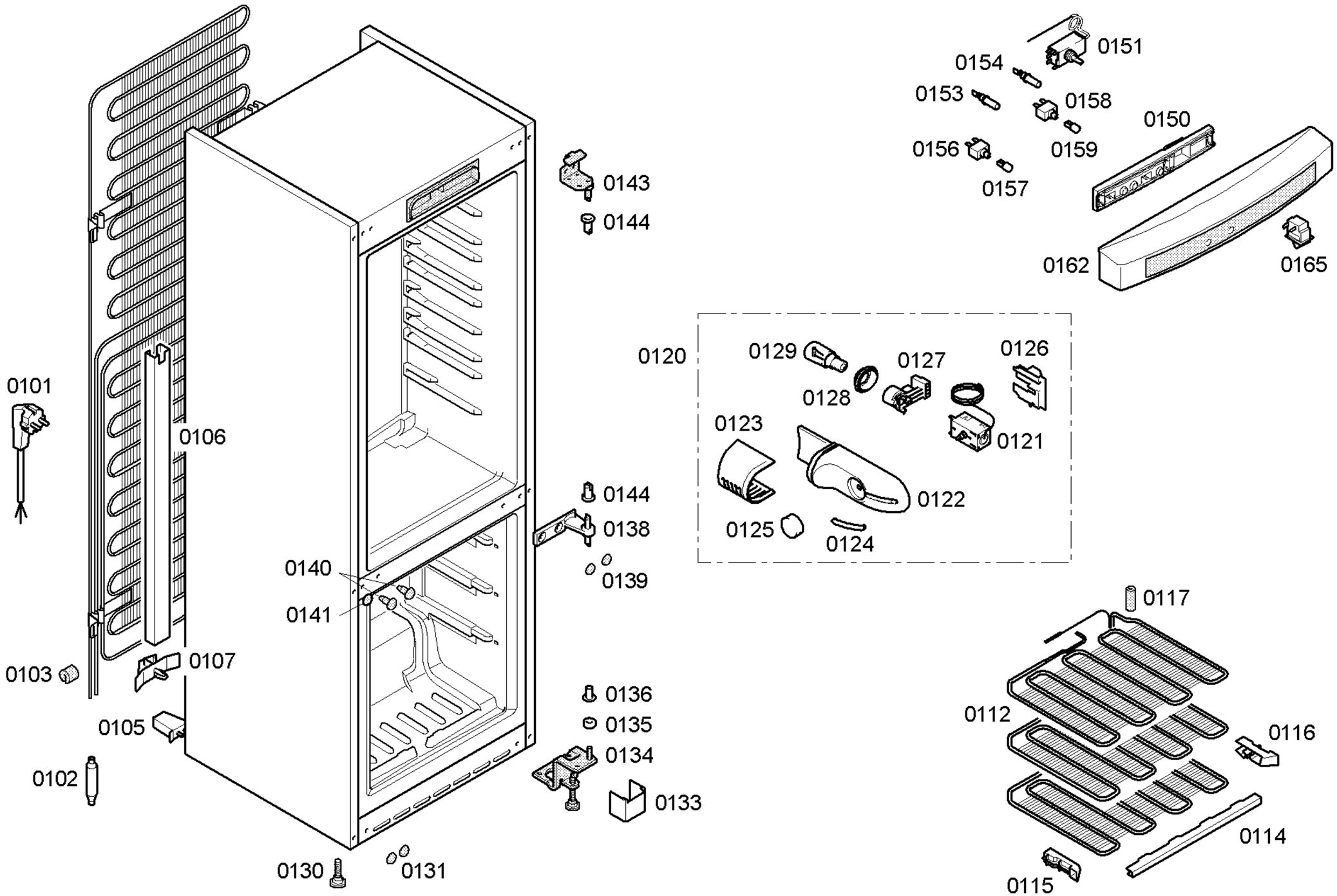

Copyright © (2013) by Lynx / 205502

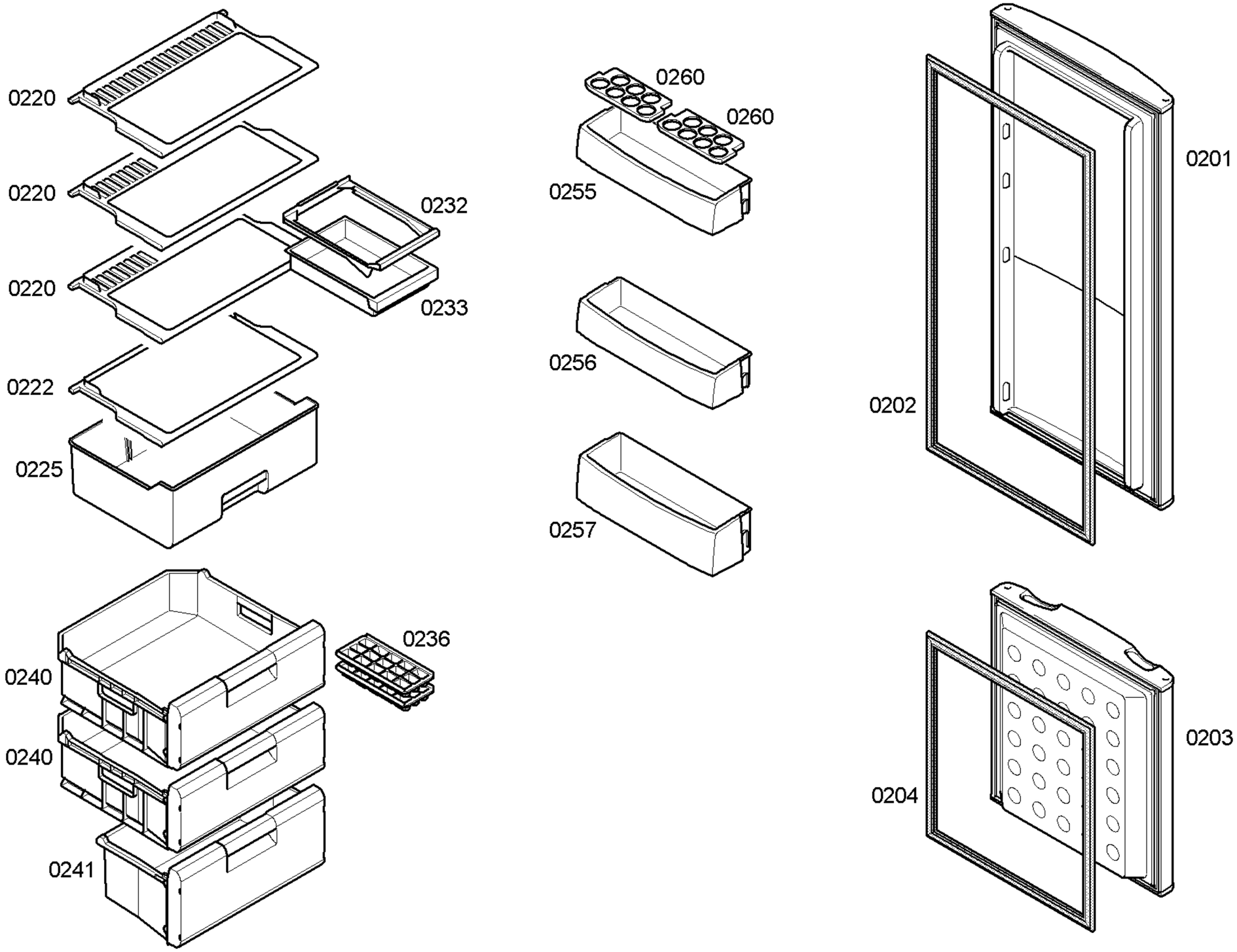

Copyright © (2013) by Lynx / 205502

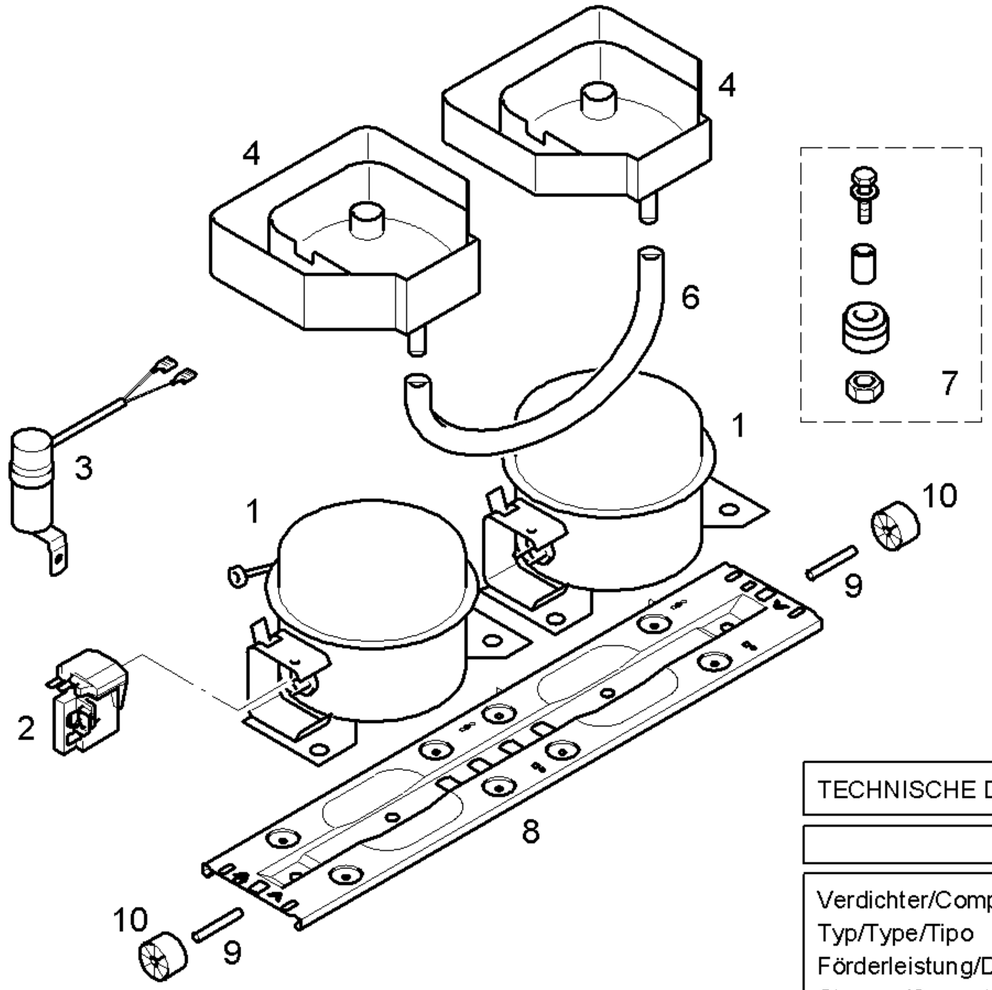

Pos.	KF/ Refrig. Cooler	GF/ Cong. Freezer
1	0301	0306
2	0302	0307
3	0303	0308
4	0304	0309
5	0305	0310
6	0311	
7	0312	
8	0313	
9	0314	
10	0315	

TECHNISCHE DATEN / TECHNICAL DATA / DONNEES TECHNICUES / DATOS TECNICOS					
Verdichter/Compressor/Compresseur/Compresor		LG	Aspera	Danfoss	
Typ/Type/Tipo		NDA62NAEG	EMU32CLC	TLY5.7KK.3	
Förderleistung/Delivery/Debit/Aspiración	l/h				
Stromm/Current consumption/Courant/Consumo	A	0,48	0,44	0,49	
Widerstand/Resistance/Resistencia (25ºC). Ha/main/prin.	Ohm	35,21	38,90	35,00	
Hi/sub/aux.	Ohm	21,49	28,30	21,00	
Kühlleistung/Cooling capacity/Potencia frigorífica	W	71	71	70	
Fülmenge/Fill. quantily/Charge/Carga R600a.	g	*	*	*	

* Siehe Typenschild /See identification plate /Voir plaquette de caractéristiques /Ver plaqueta de características

Copyright © (2013) by Lynx / 205502