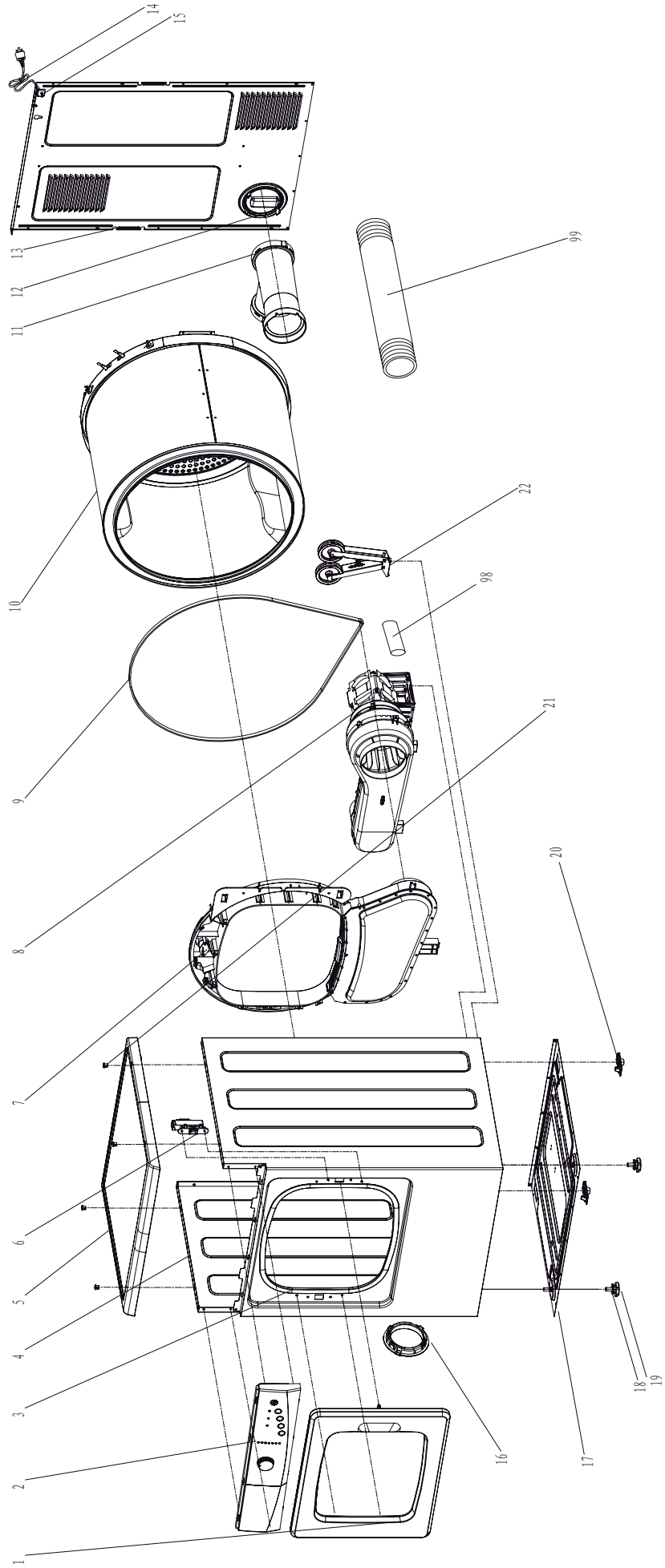

Owned by an entity of FAGOR GROUP / Copy prohibided

Nº 23592

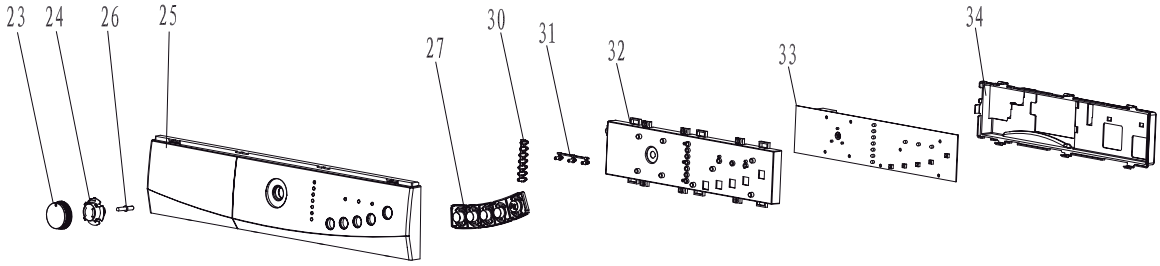

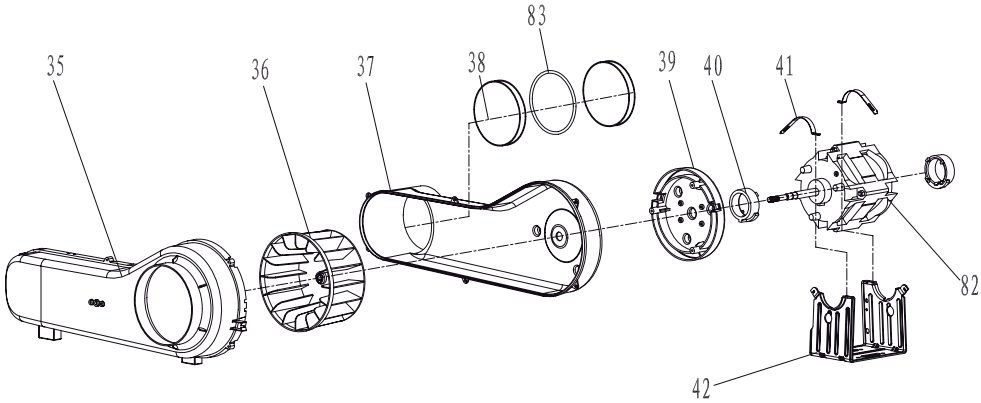

Owned by an entity of FAGOR GROUP / Copy prohibided

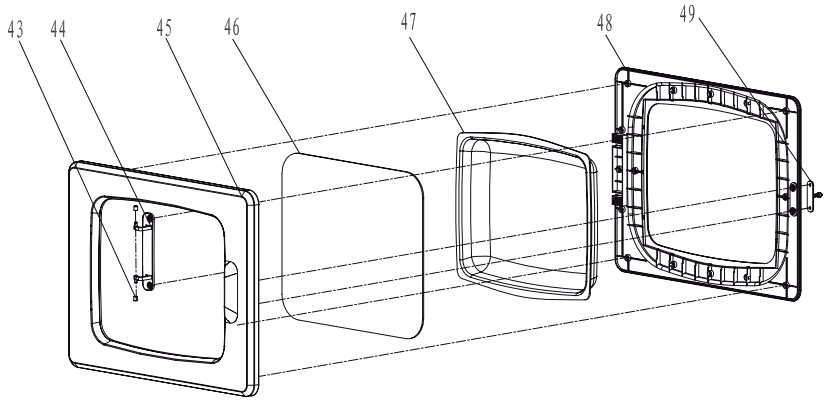

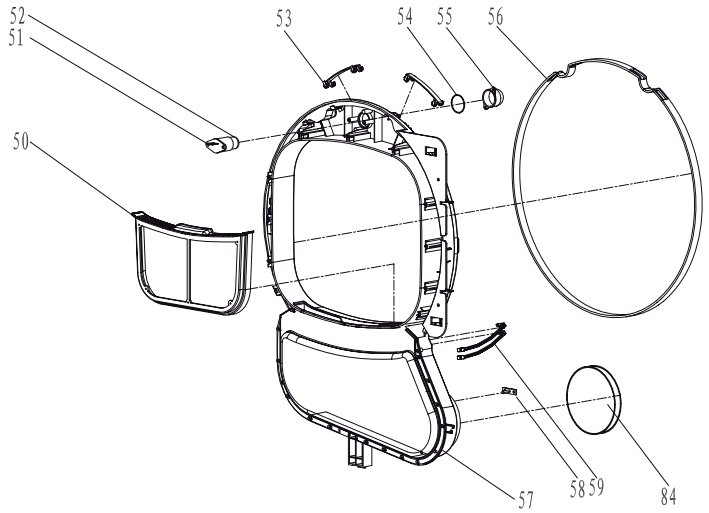

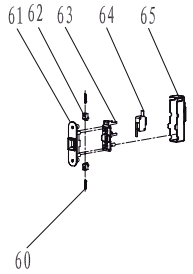

Owned by an entity of FAGOR GROUP / Copy prohibided

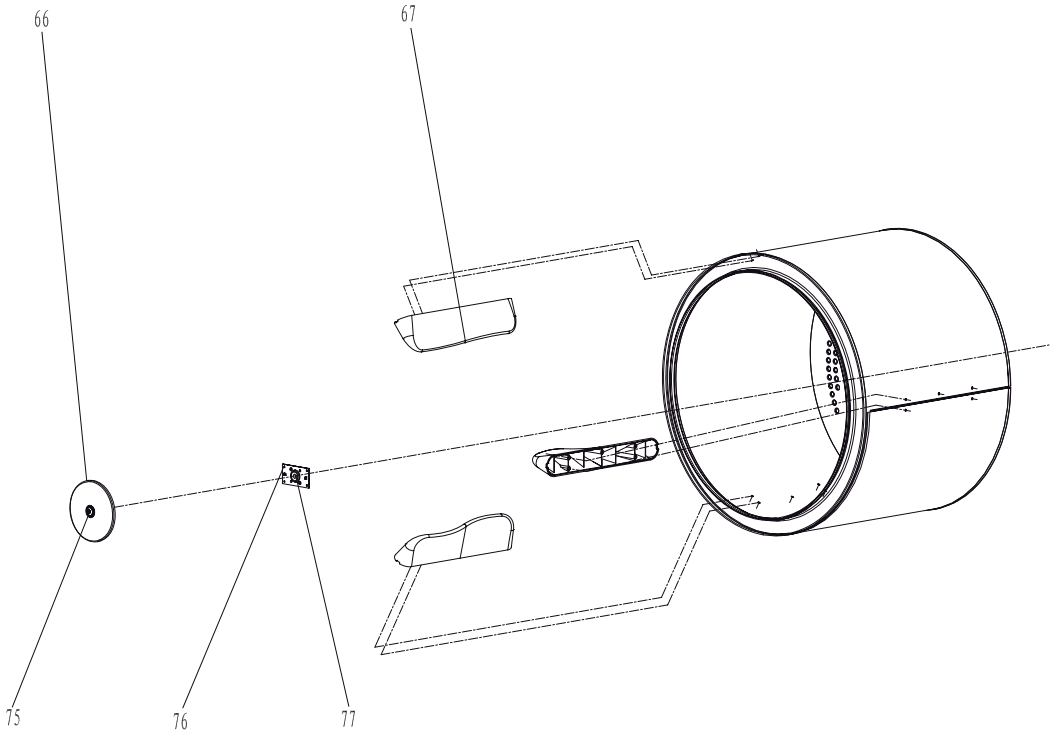

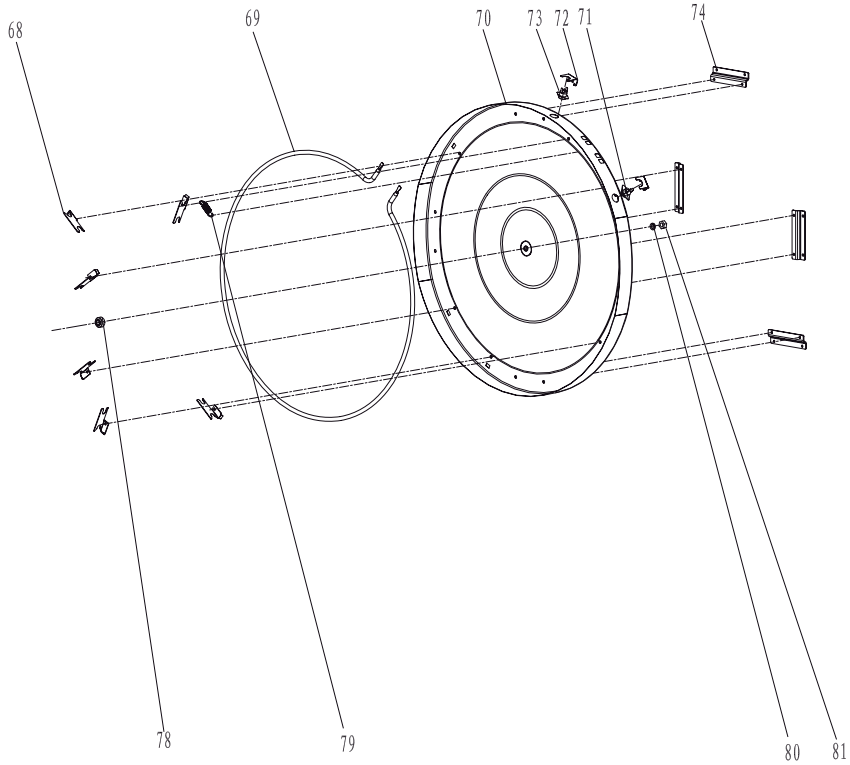

Owned by an entity of FAGOR GROUP / Copy prohibided