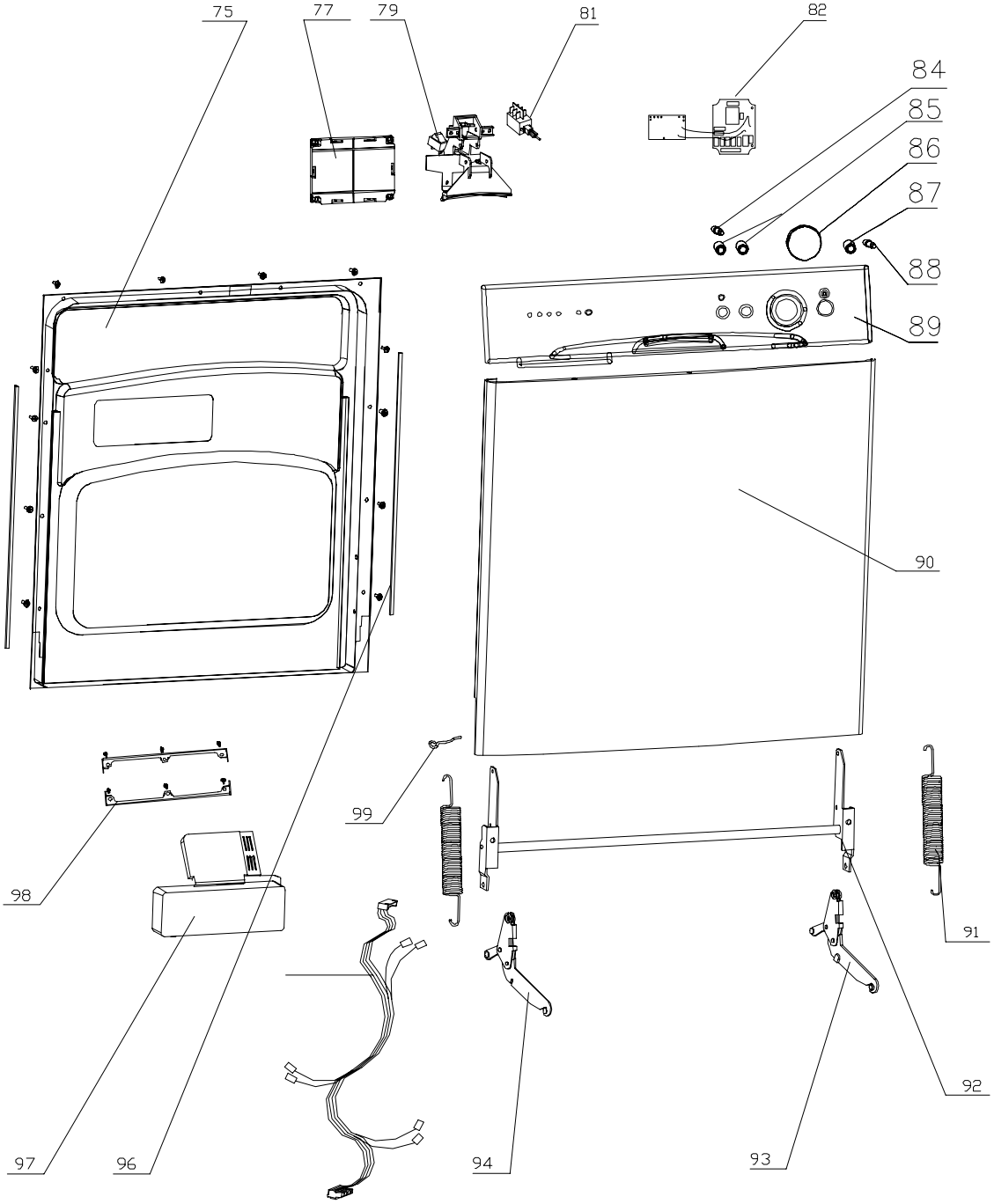
75
77
79
81
82
84
85
86
87
88
89
90
91
92
93
94
96
97
98
99

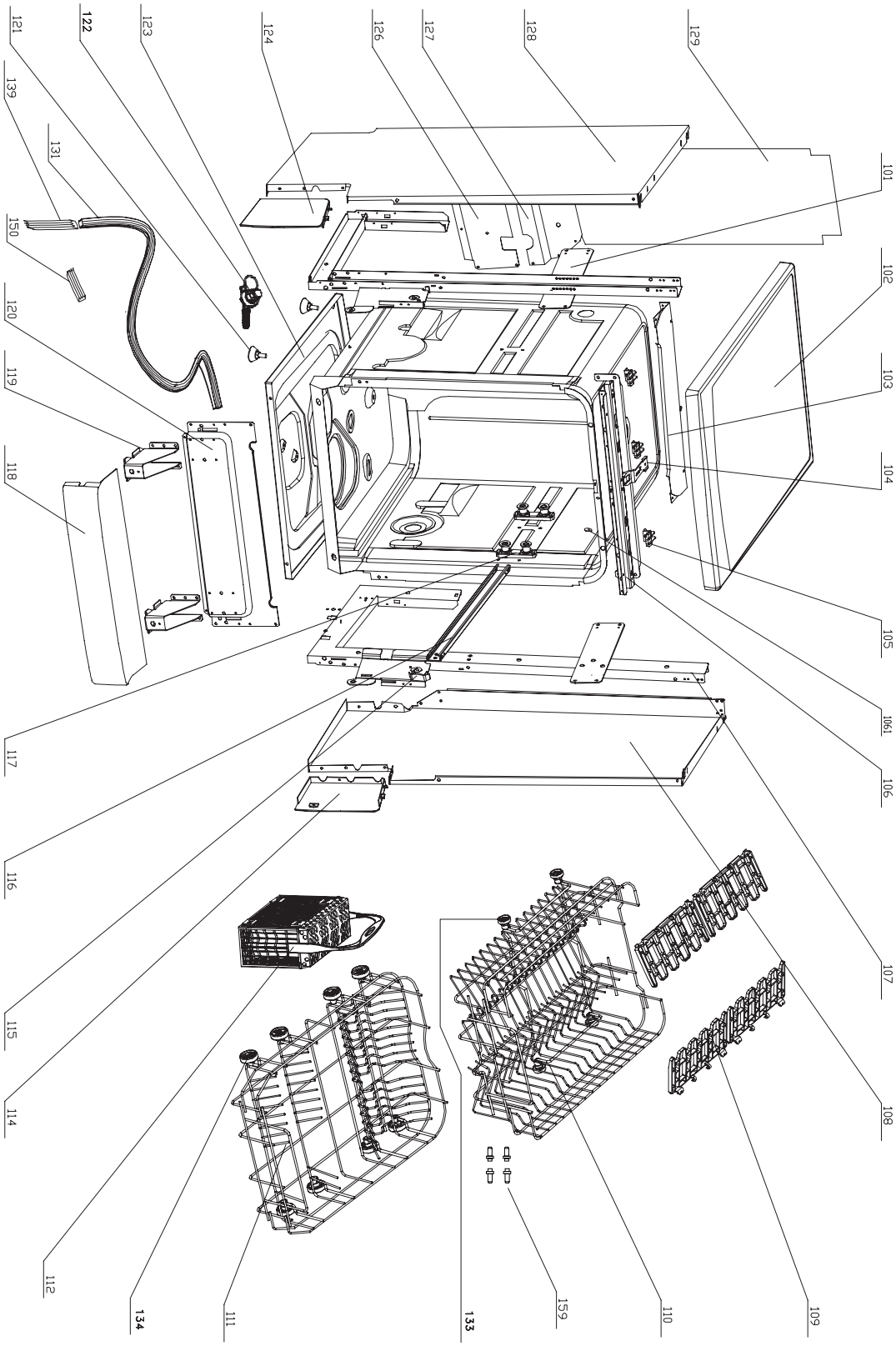

Owned by an entity of FAGOR GROUP / Copy prohibided

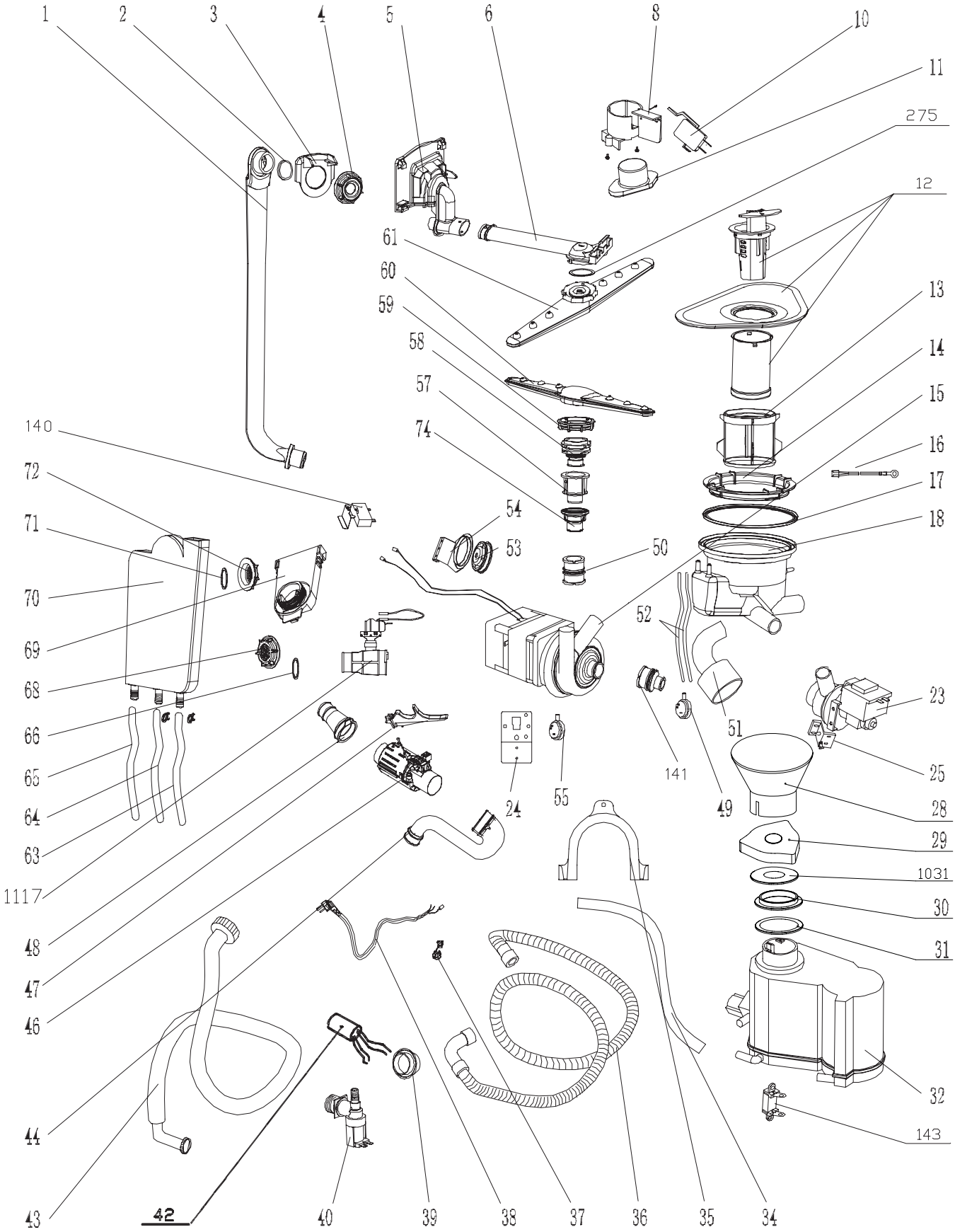
1
2
3
4
5
6
8
10
11
275
12
13
14
15
16
17
18
61
60
59
58
57
74
140
72
71
70
69
68
66
65
64
63
1117
48
47
46
44
43
42
40
39
38
37
36
35
34
32
143
31
30
1031
29
28
25
23
51
49
141
55
24
50
53
54
52