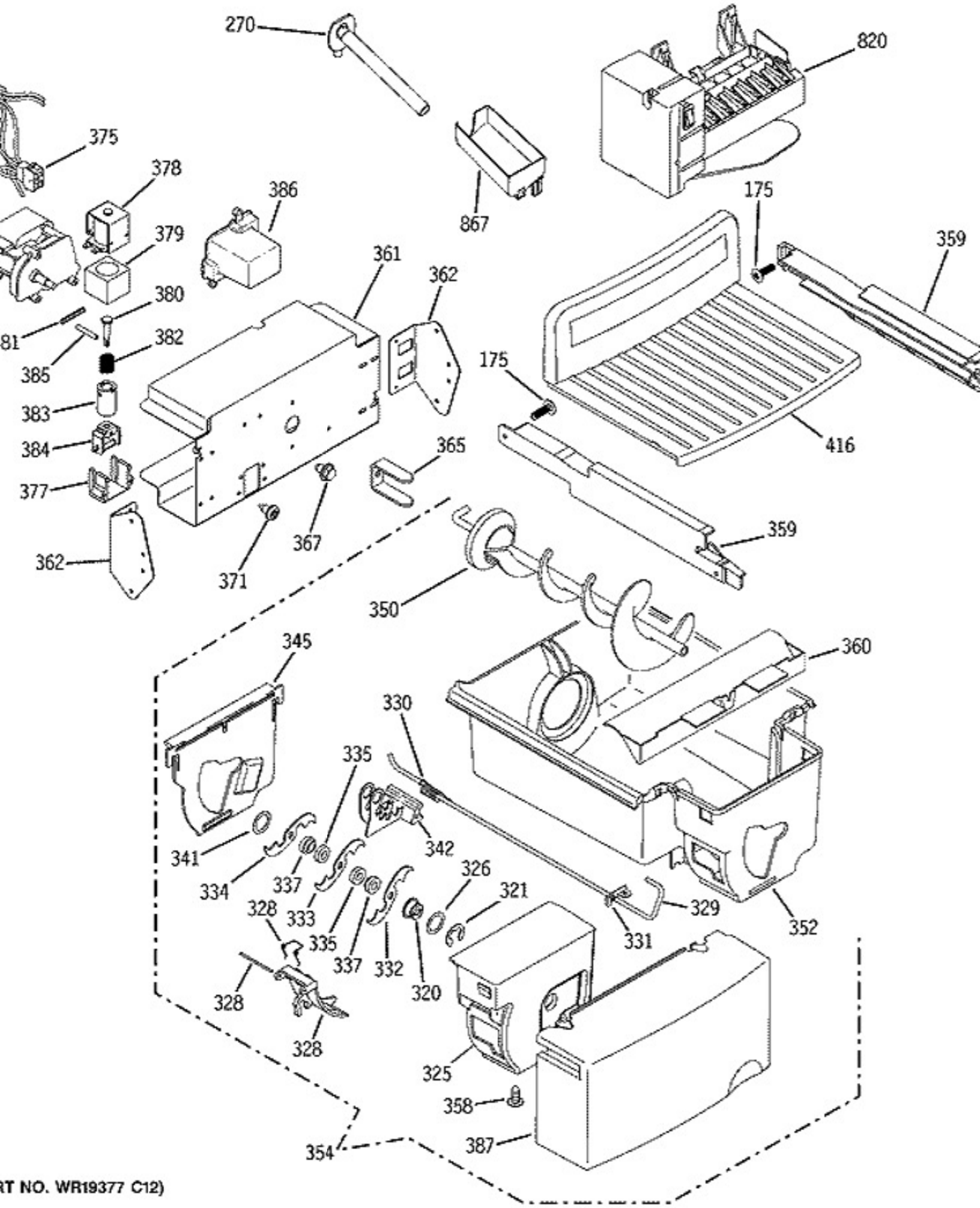

RT NO. WR19377 C12)

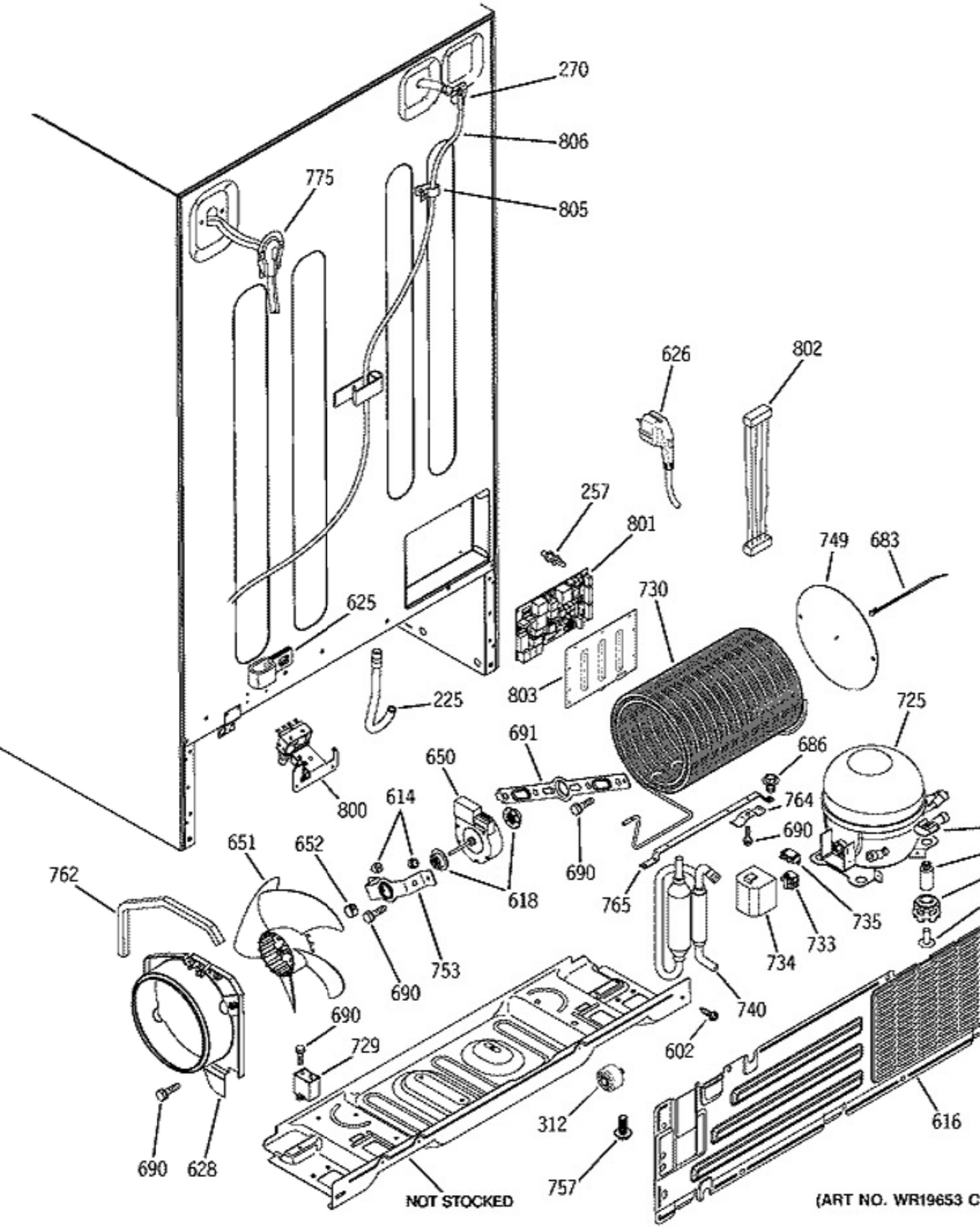
270
806
775
805
626
802
257
801
749
683
730
625
803
225
725
691
686
650
800
614
764
690
651
652
690
762
618
765
735
733
753
734
690
740
690
729
602
312
616
690
628
757
NOT STOCKED
(ART NO. WR19653 C

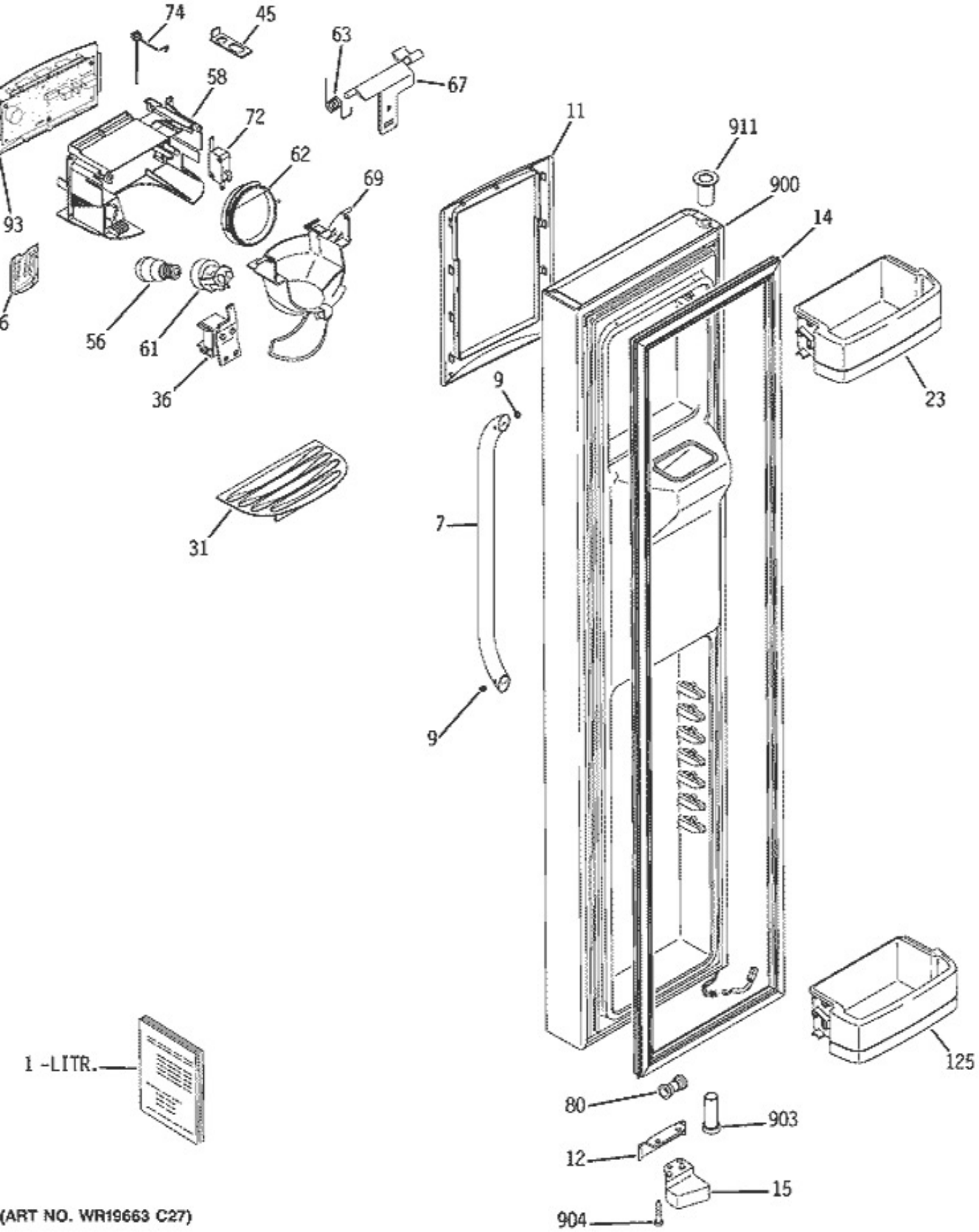

(ART NO. WR19663 C27)

IMPORTANT NOTE:
Additional parts are required to install evaporator. See EVAPORATOR INSTRUCTIONS page of this model for additional part numbers and replacement options

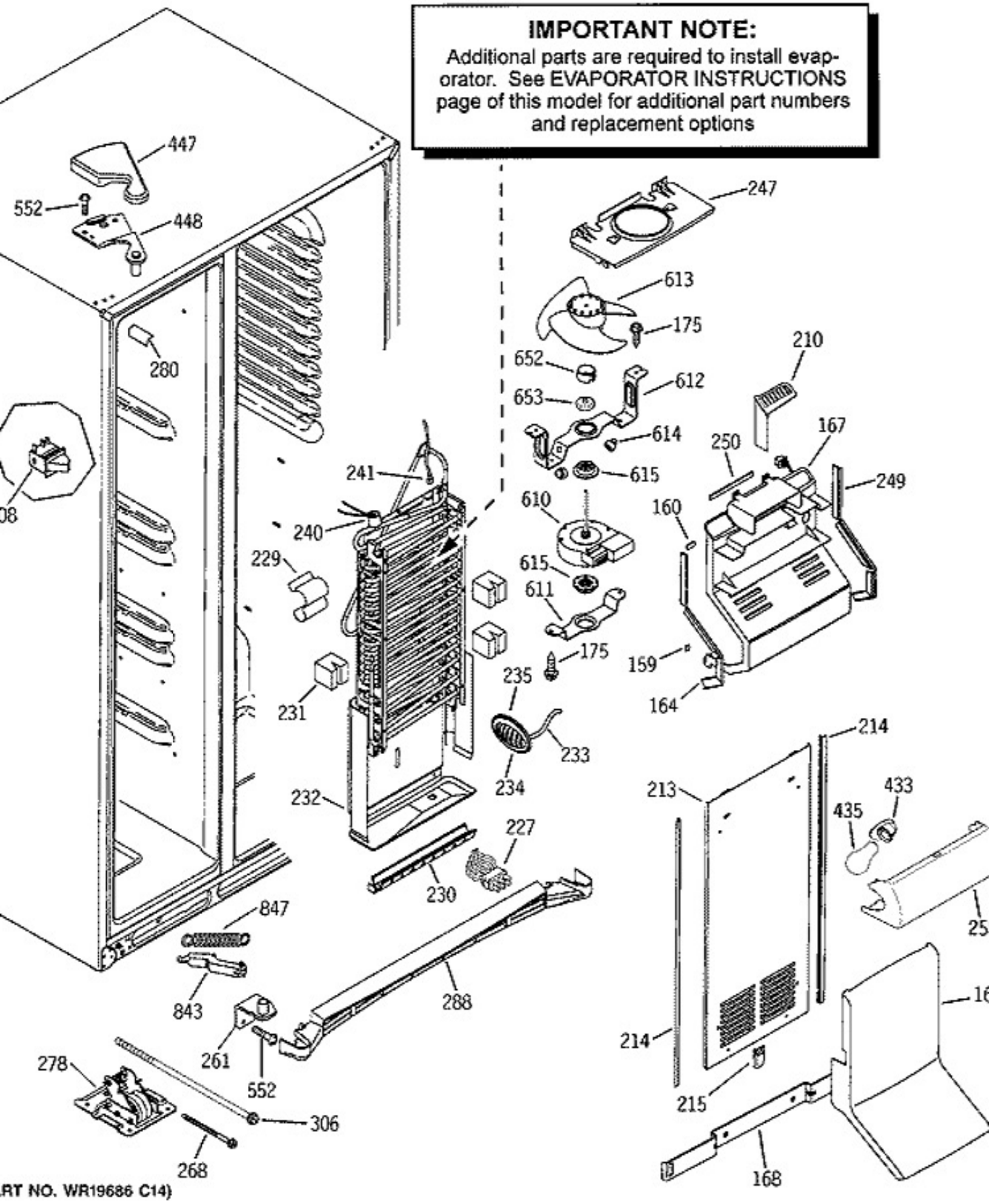

RT NO. WR19686 C14)

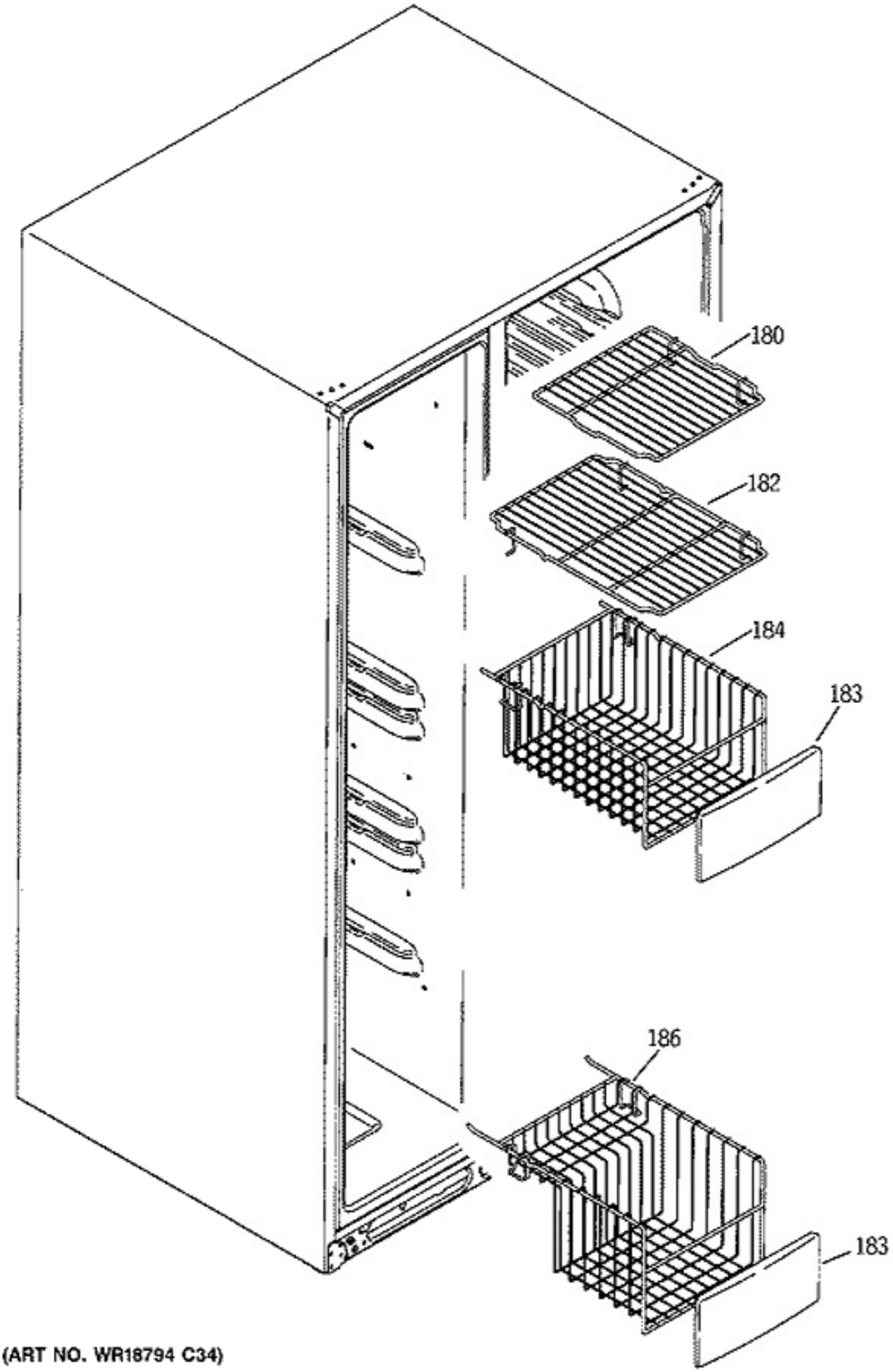

(ART NO. WR18794 C34)

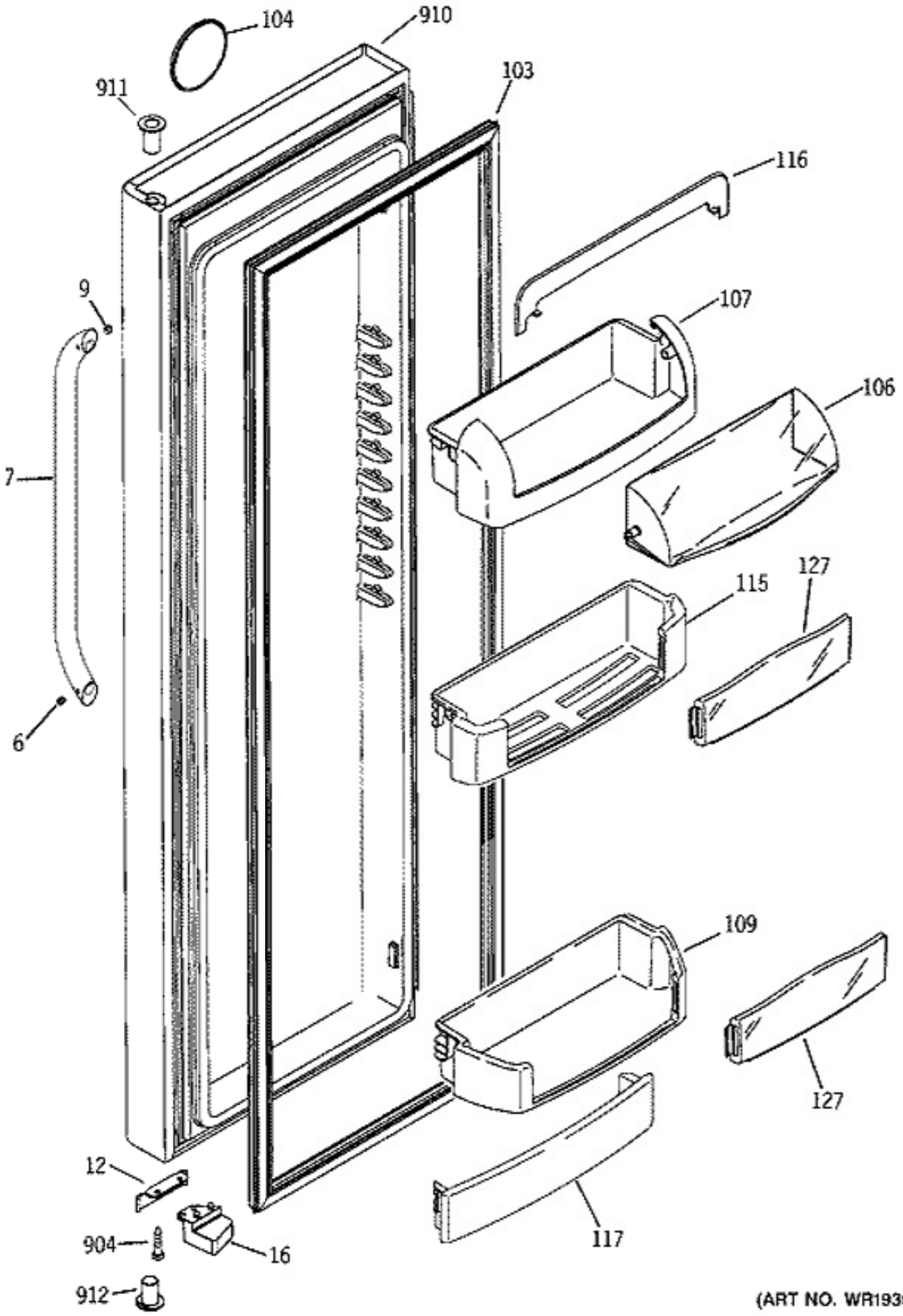

(ART NO. WR19394 C3)

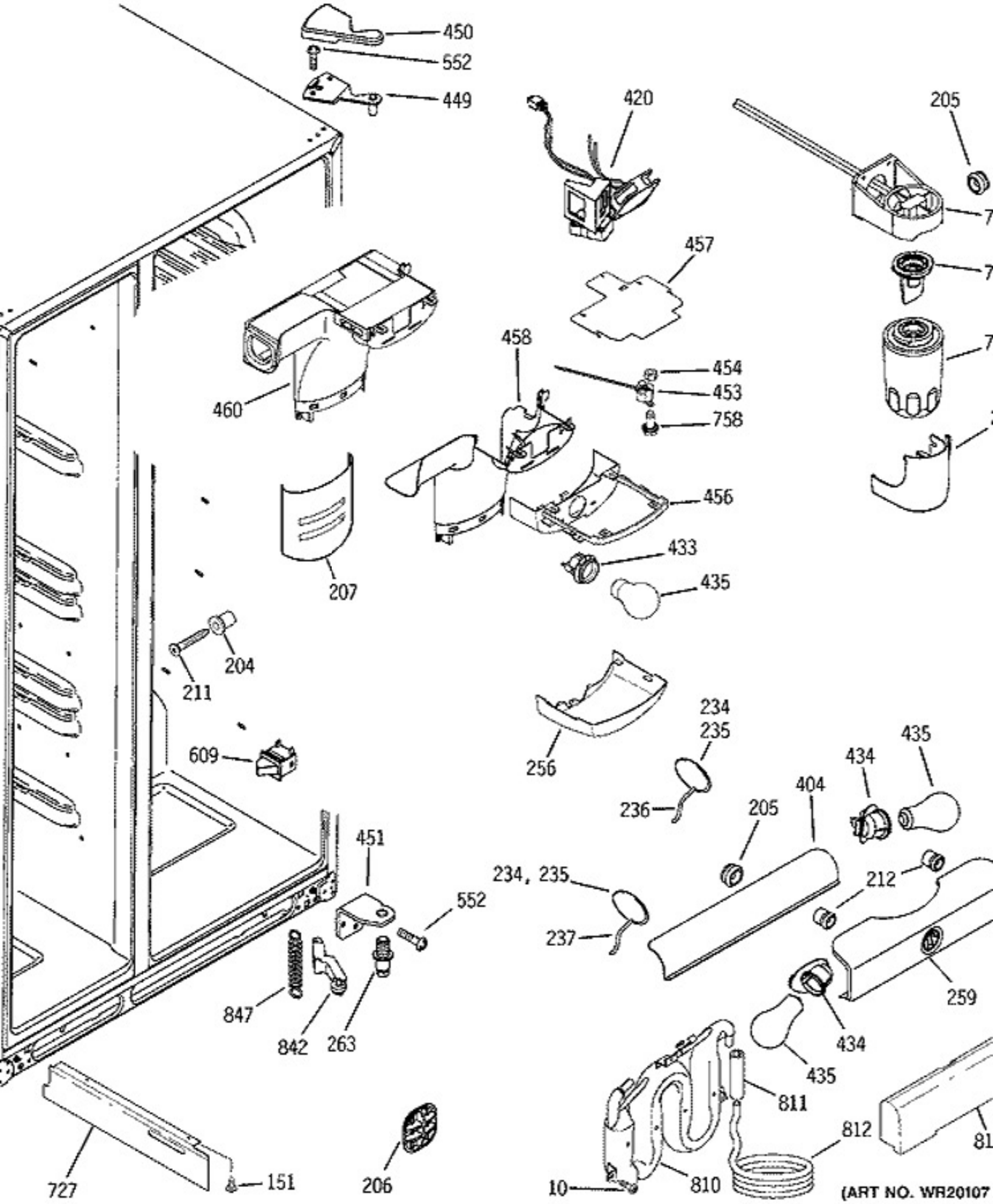
450
552
449
420
205
457
458
454
453
758
460
456
433
435
207
204
211
609
256
234
235
236
435
434
404
205
451
234, 235
212
552
237
259
847
842
263
434
435
811
812
727
151
206
10
810
(ART NO. WR20107

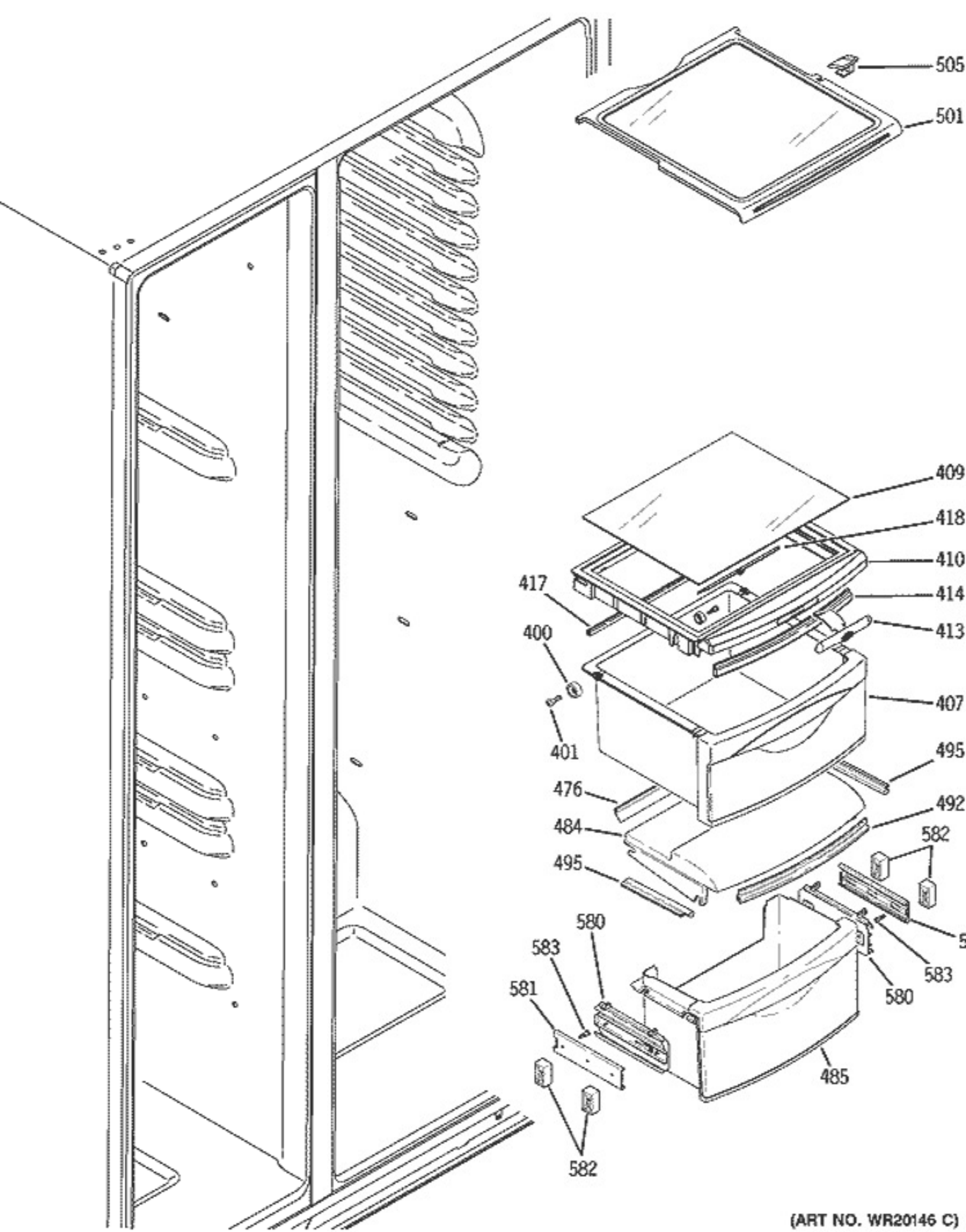

(ART NO. WR20146 C)