GTG16HBWW
GTG16HBMCRWW
GTG16

GENERAL ELECTRIC

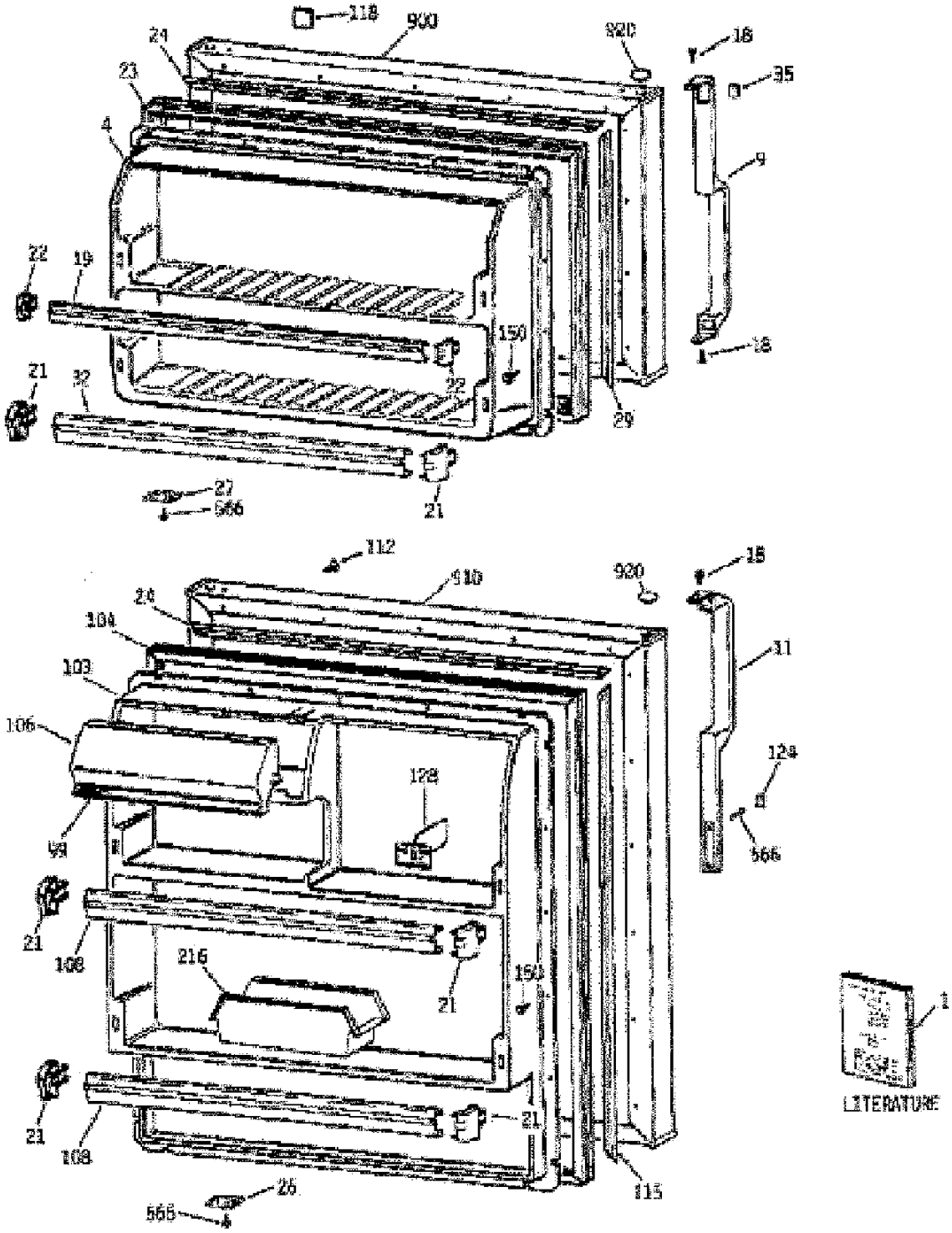

GENERAL ELECTRIC

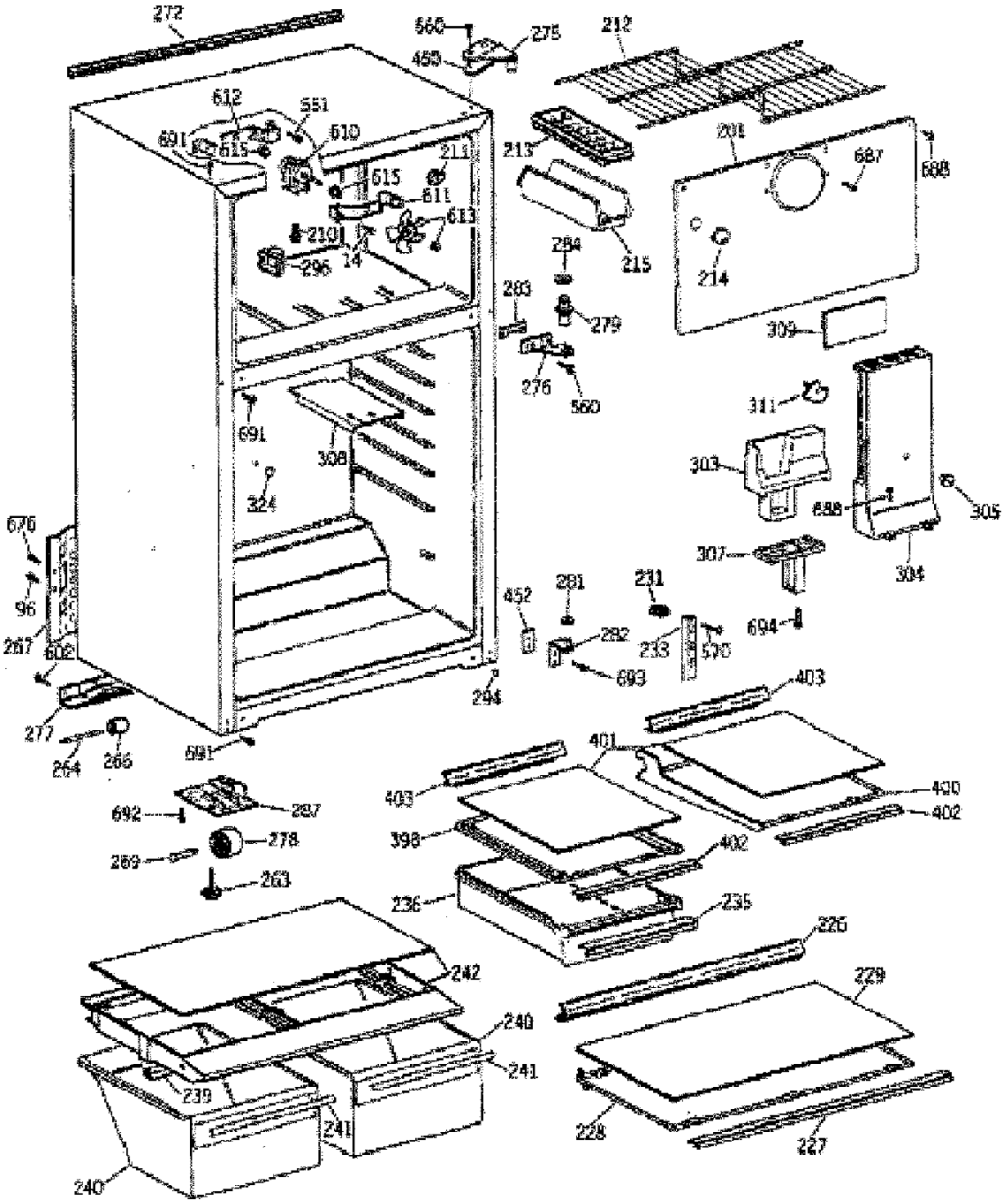
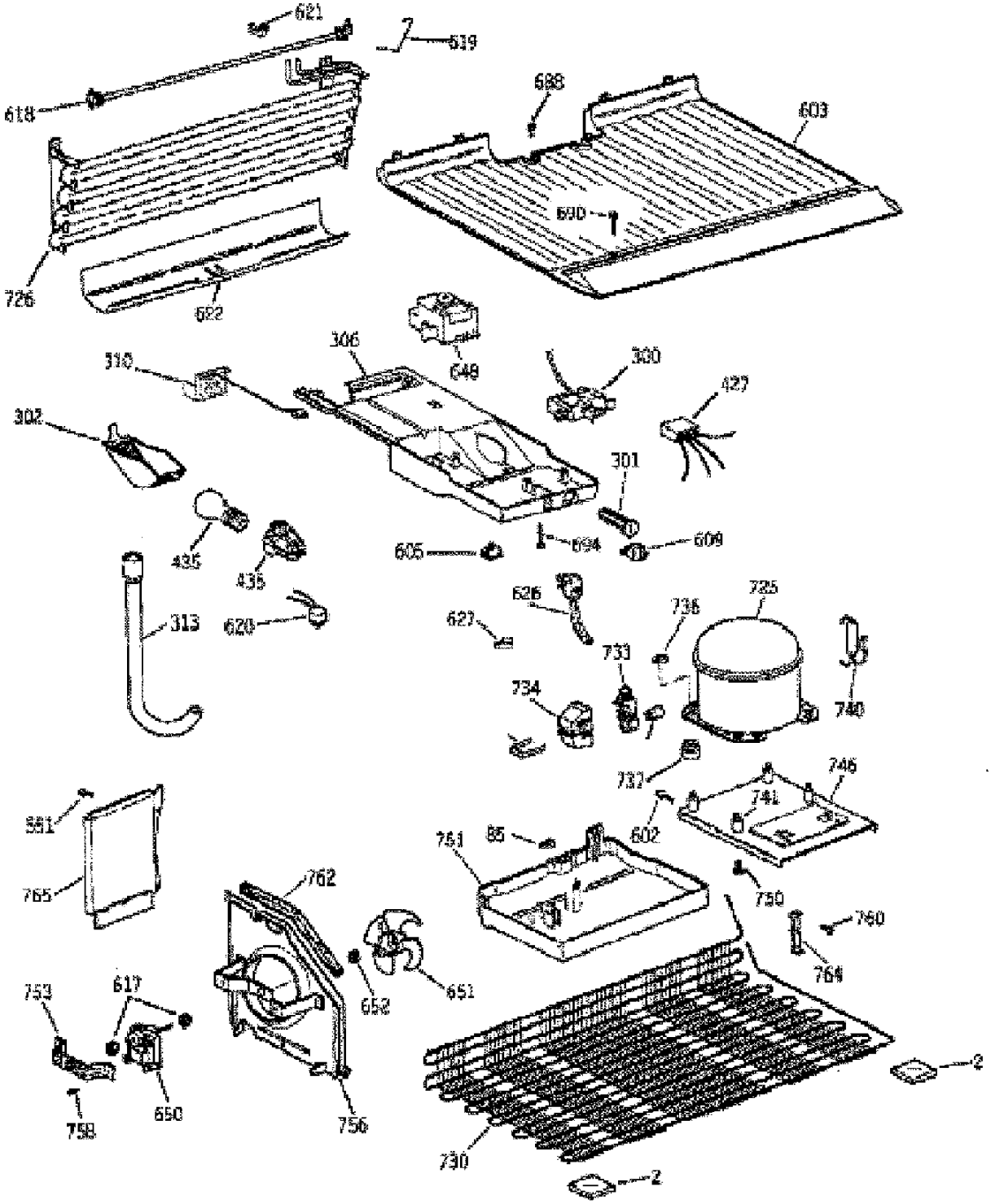
GENERAL ELECTRIC