PARTADVANTAGE

www.partadvantage.com

Model Number: PCG23MIMFFWW
Questions? Call Us Toll-Free: **1-866-678-3718**
Monday to Friday: 8:30am to 5:00pm
Click Here to Print

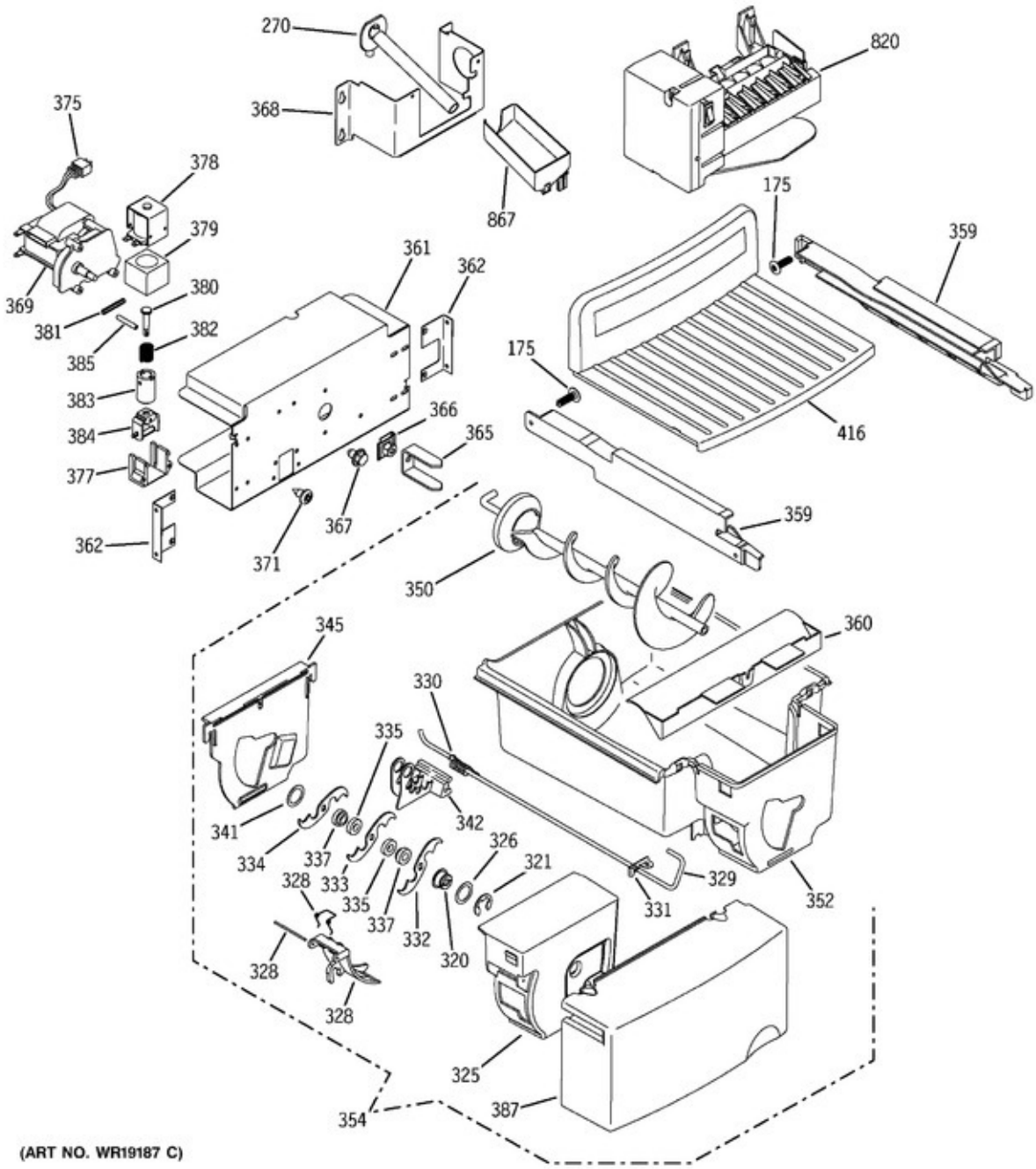

(ART NO. WR19187 C)