Model: AFD634CX

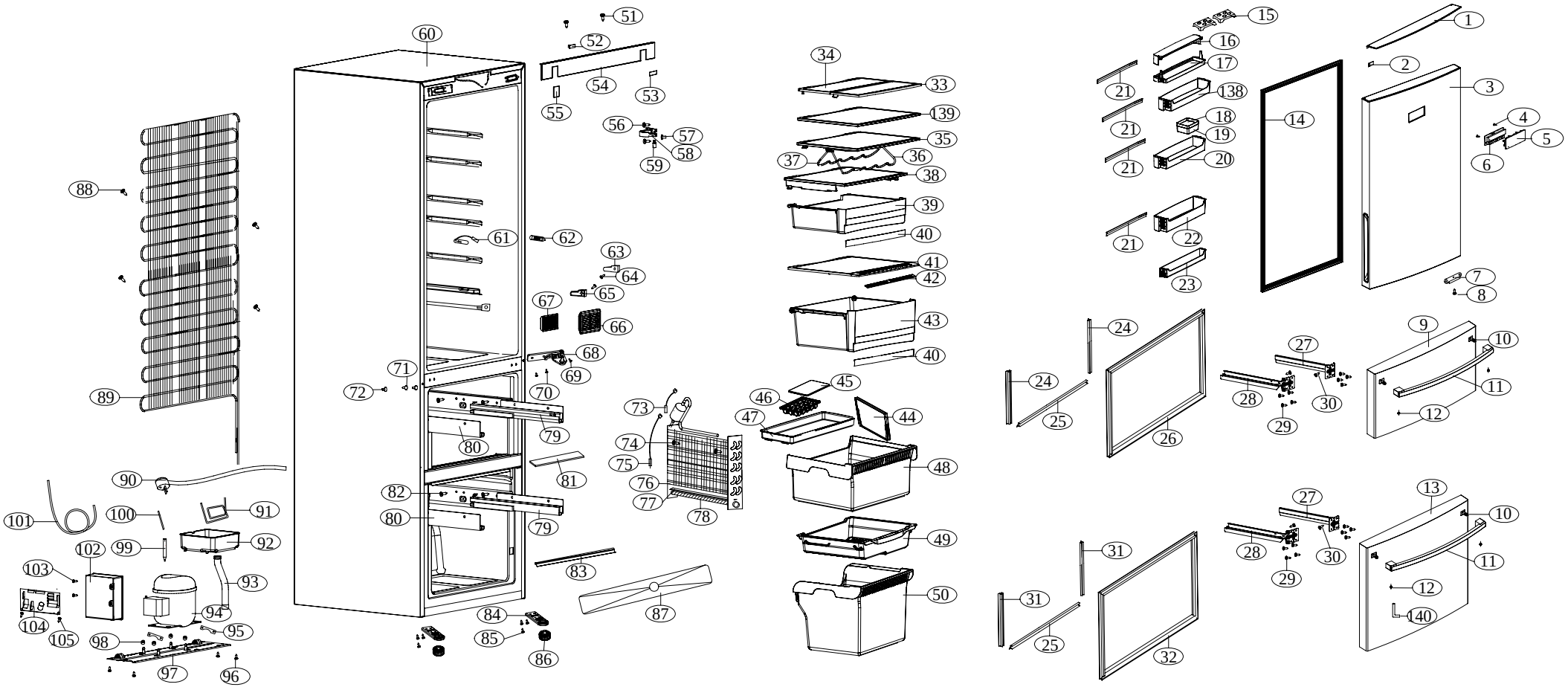

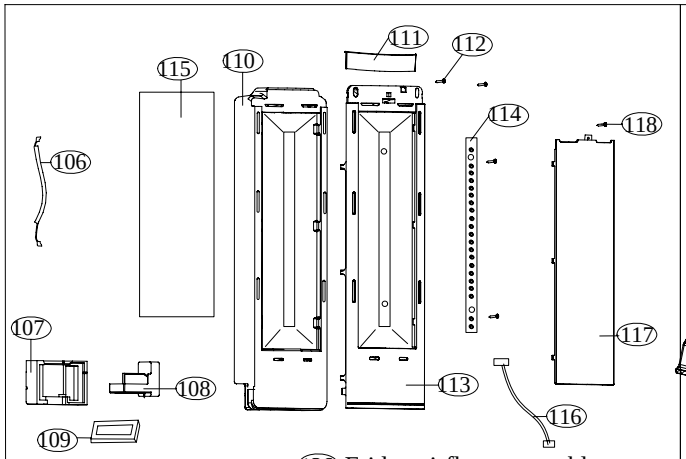

136 Fridge airflow assembly

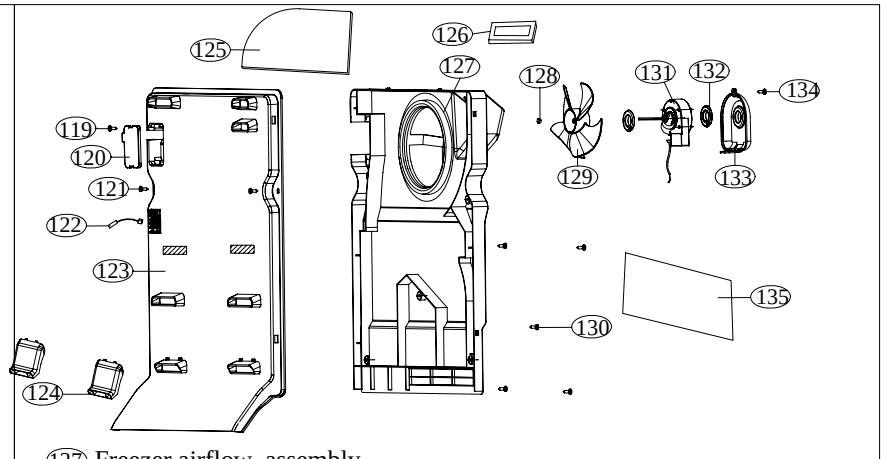

137 Freezer airflow assembly