Haier

Diwshwasher Model:DW12-AFE4T BOM:FA05N0E0N00

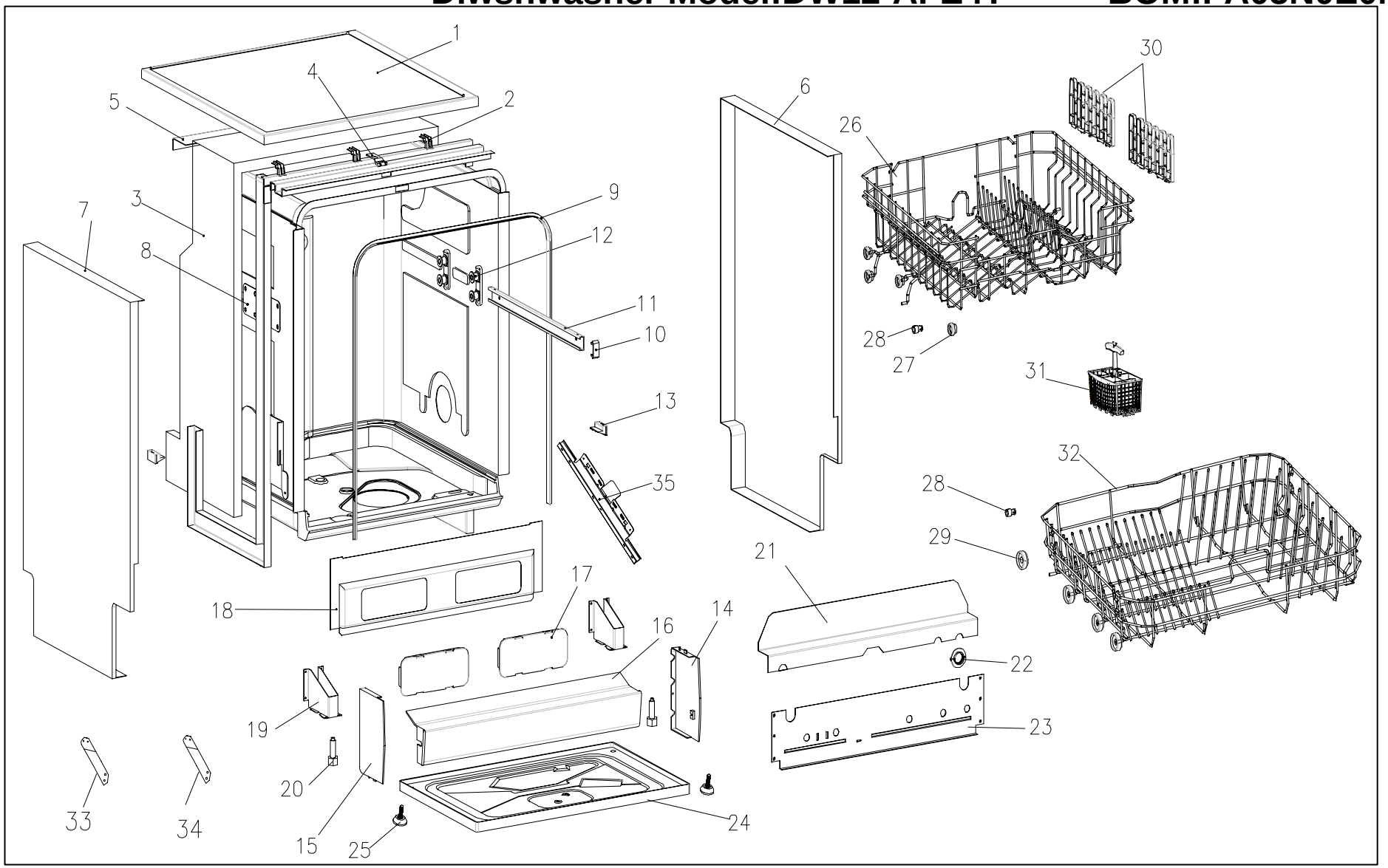

Exploded View

Version:2008-12-8

Haier

Diwshwasher Model:DW12-AFE4T BOM:FA05N0E0N00

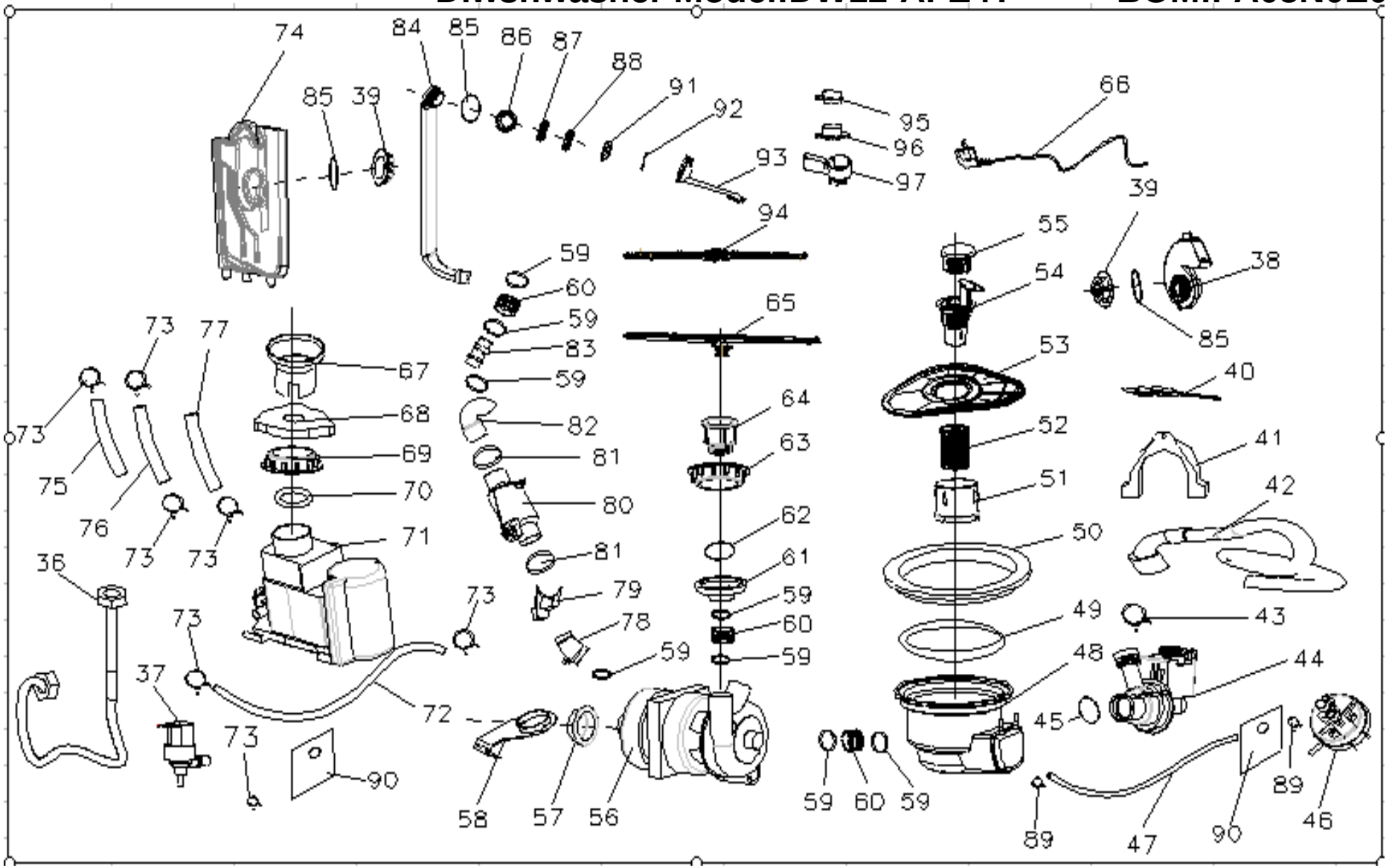

Haier
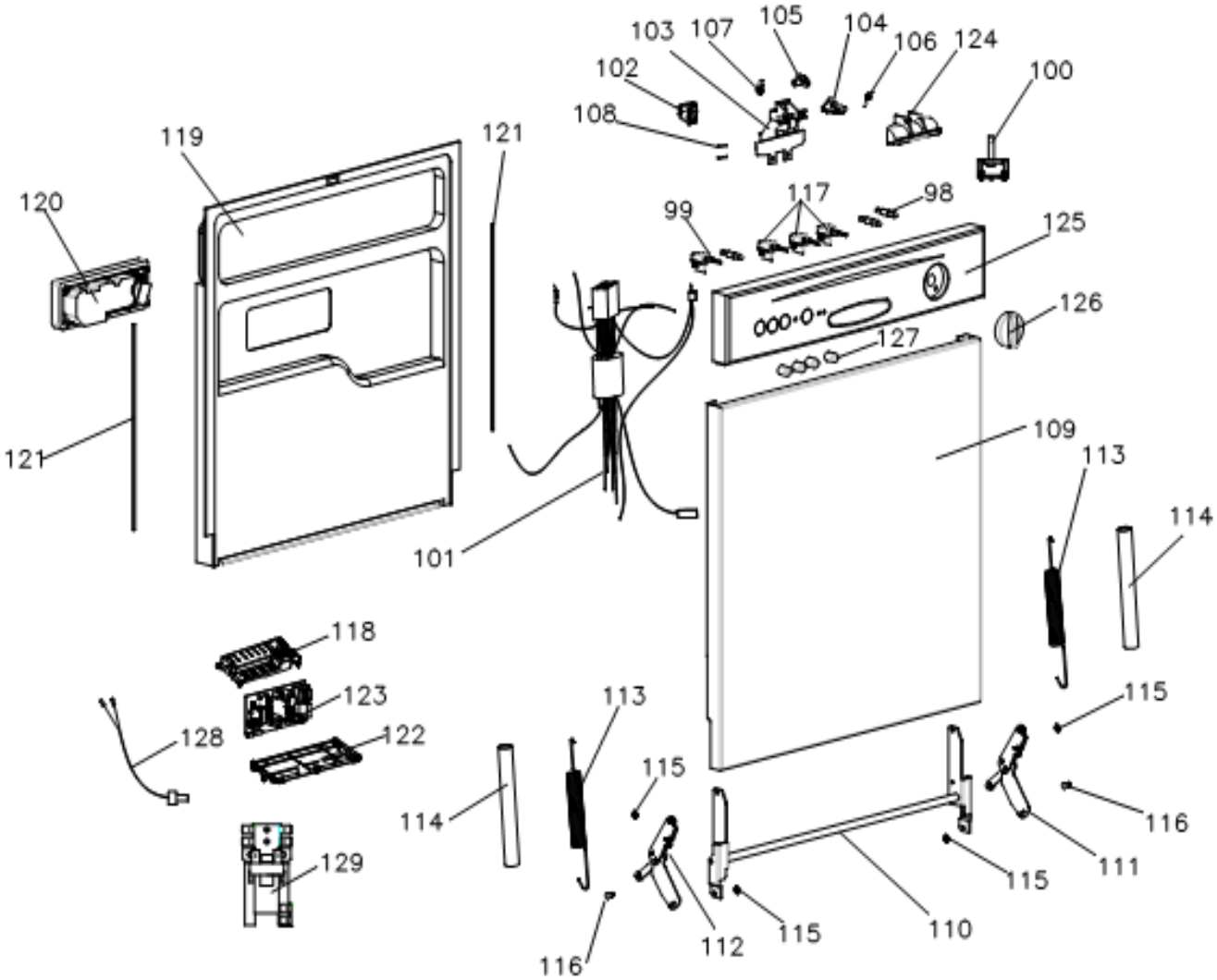
Diwshwasher Model:DW12-AFF4T BOM:FA05N0F0N00