## 11. Disassembly diagrams *(For P50T01U, P50T01E, P50TP01U and P50TP01E)*

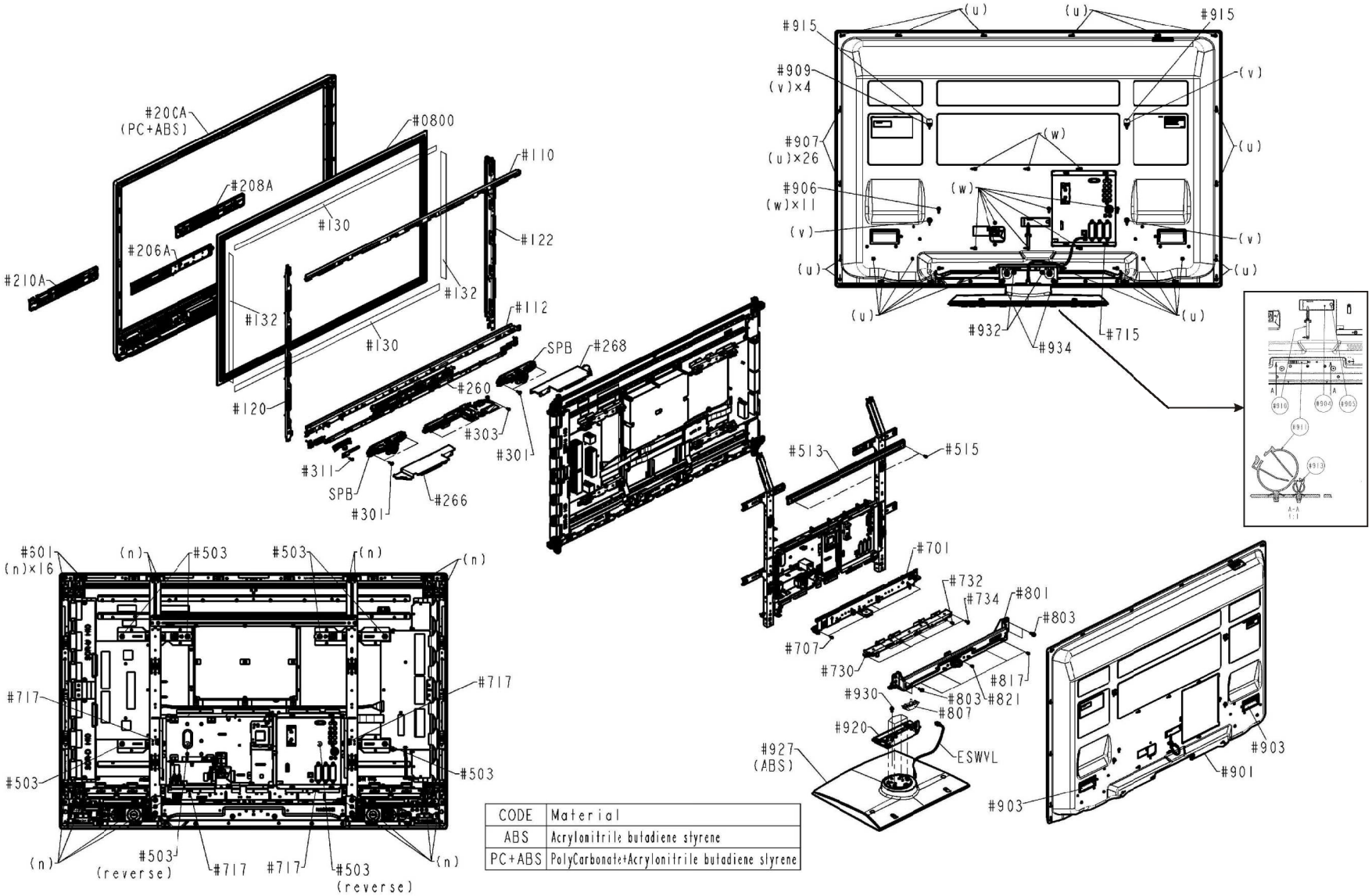


| CODE | Material |
|---|---|
| ABS | Acrylonitrile butadiene styrene |
| PC+ABS | PolyCarbonate+Acrylonitrile butadiene styrene |

| SM016 | ASSEMBLY DRAWING | HITACHI |
|---|---|---|