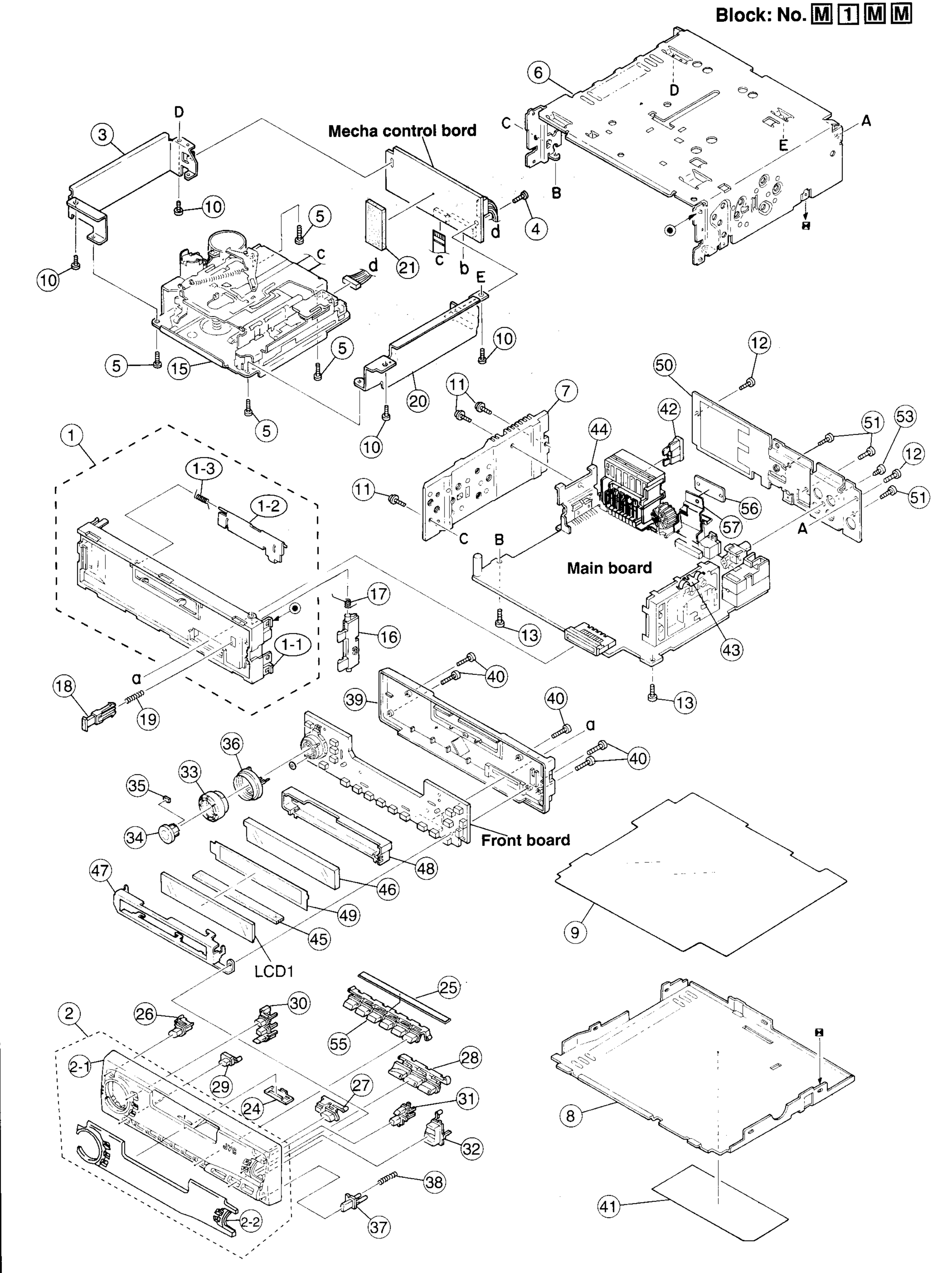
Mecha control bord
Main board
Front board
LCD1