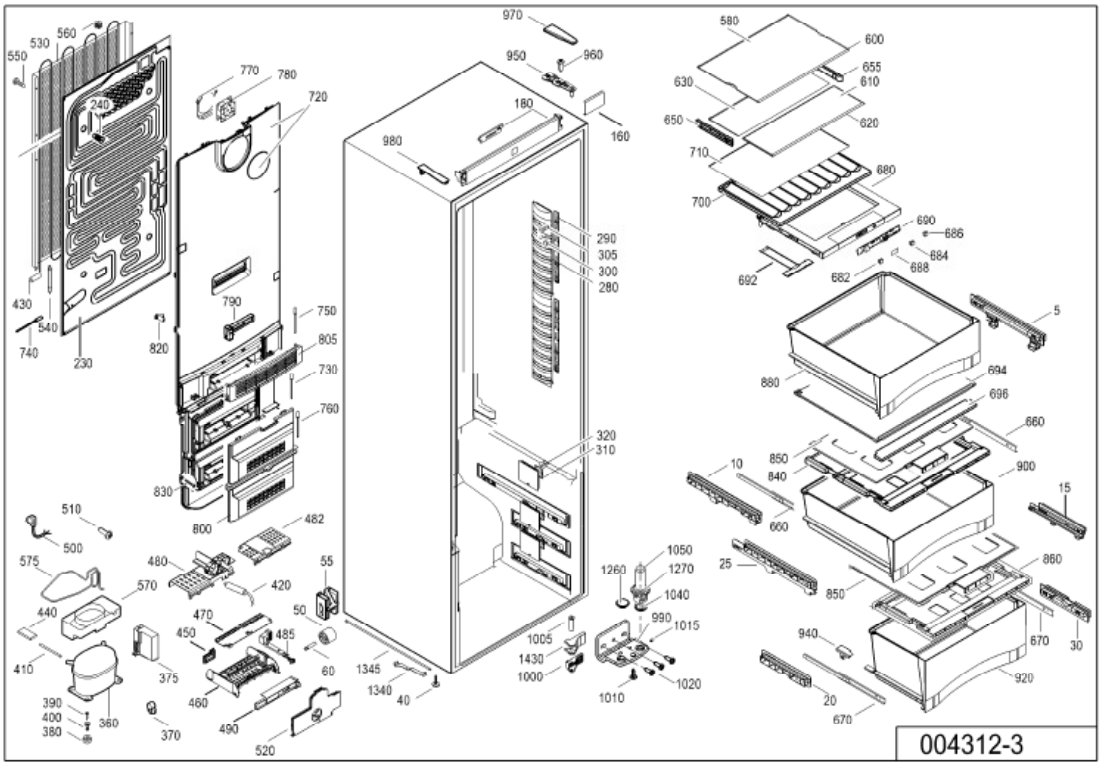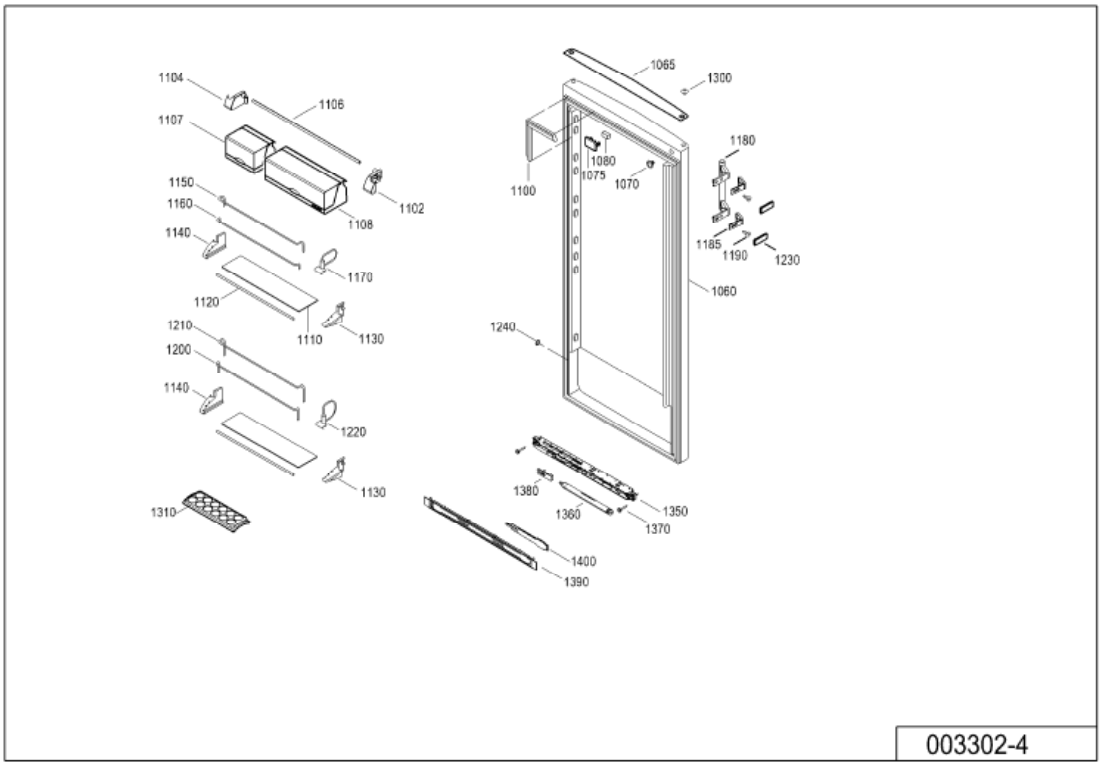Design/001/SKBes/SKBes 4213-21B/spare parts list