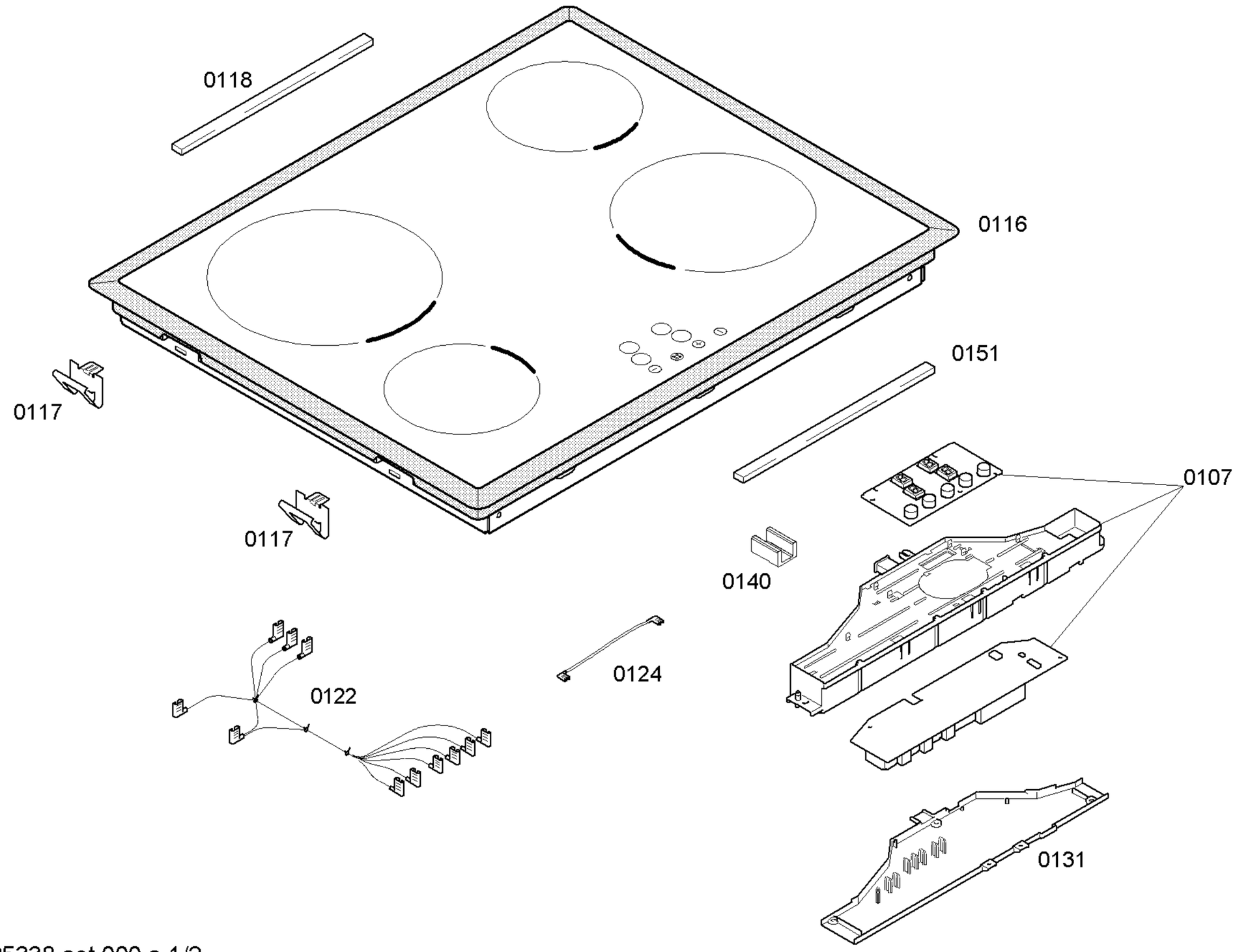

58300000125338 aet 000 a 1/2

Copyright © (2021) by Lynx / 205502

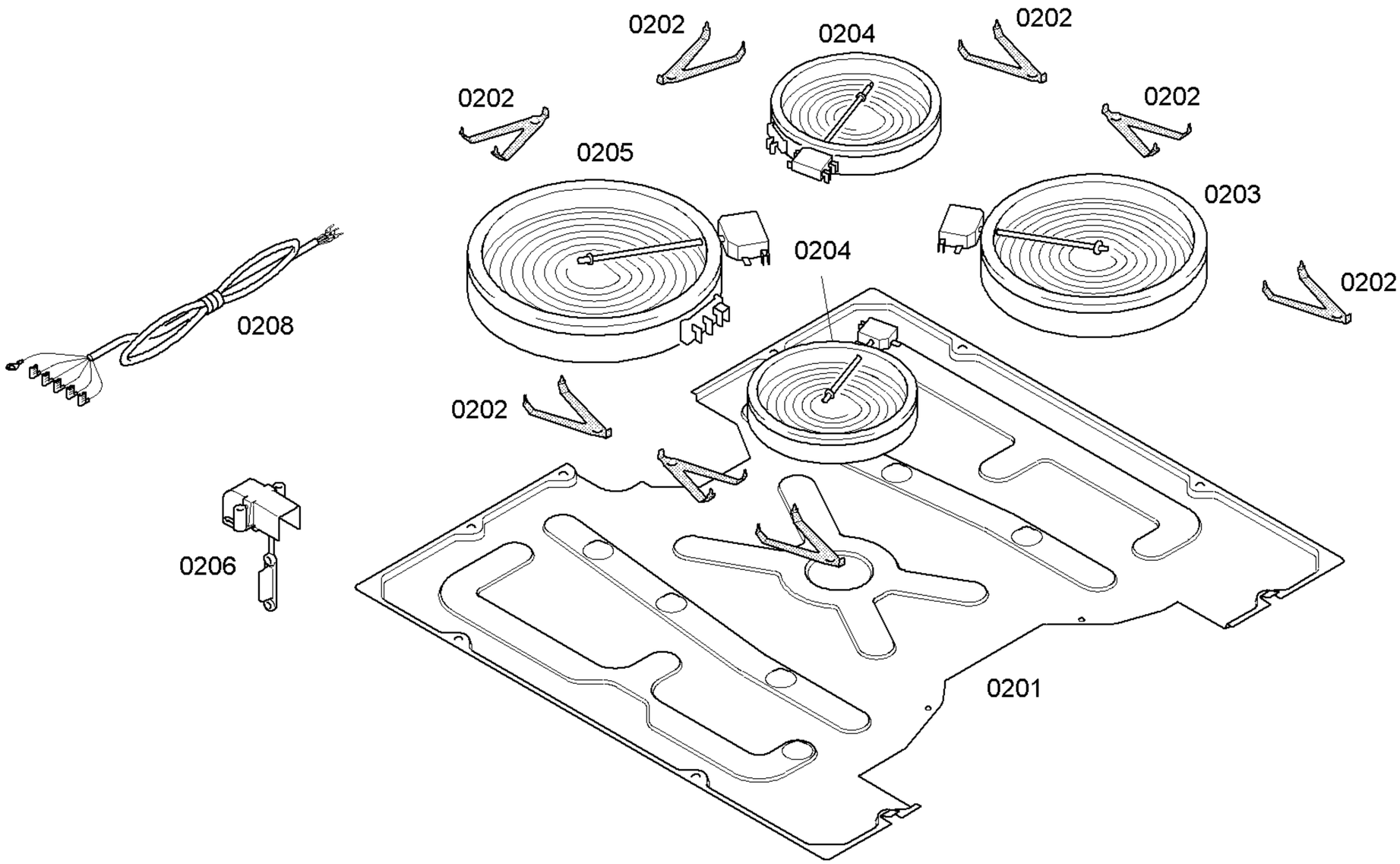

58300000125338 aet 000 a 2/2

Copyright © (2021) by Lynx / 205502