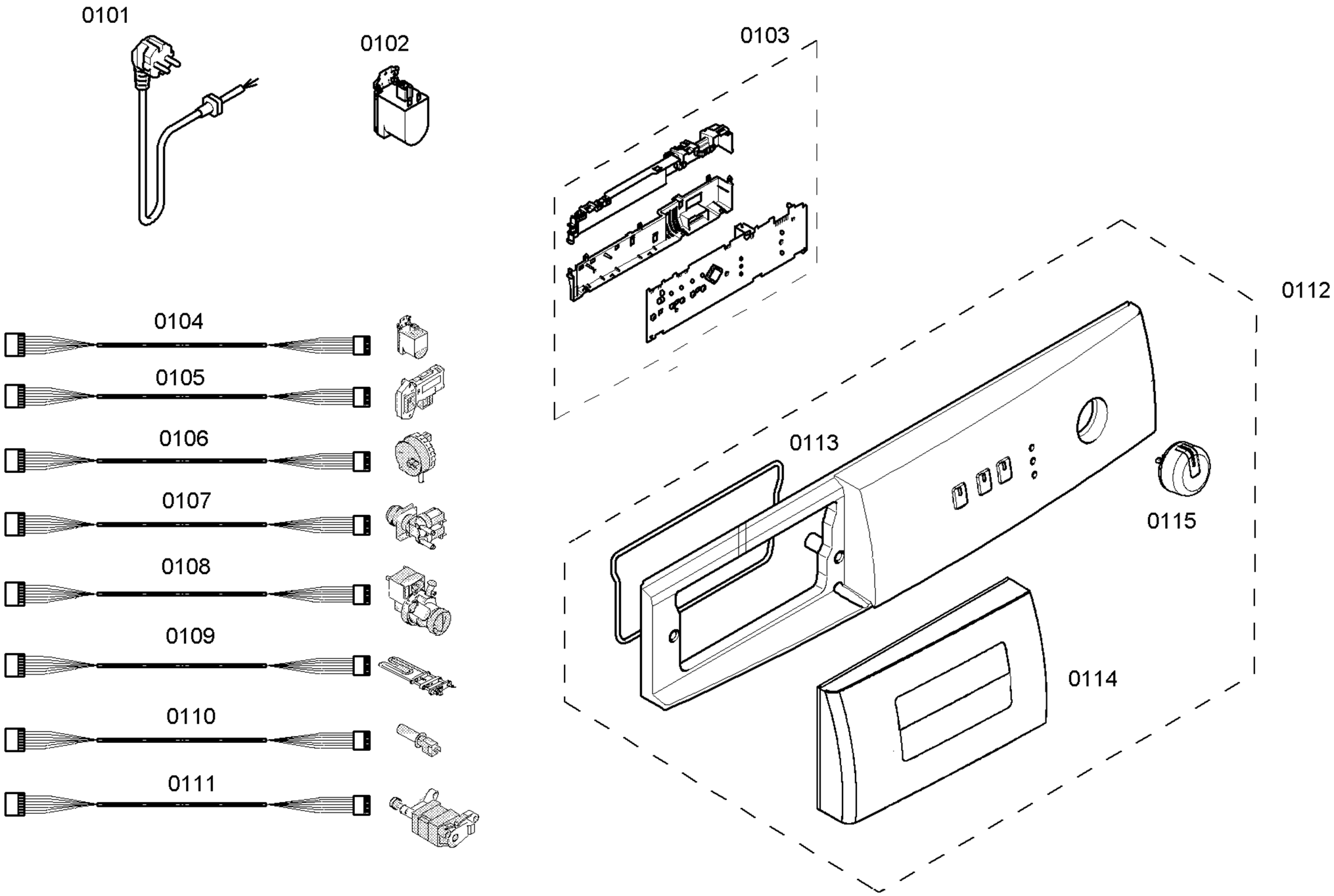

Copyright © (2017) by Lynx / 205502

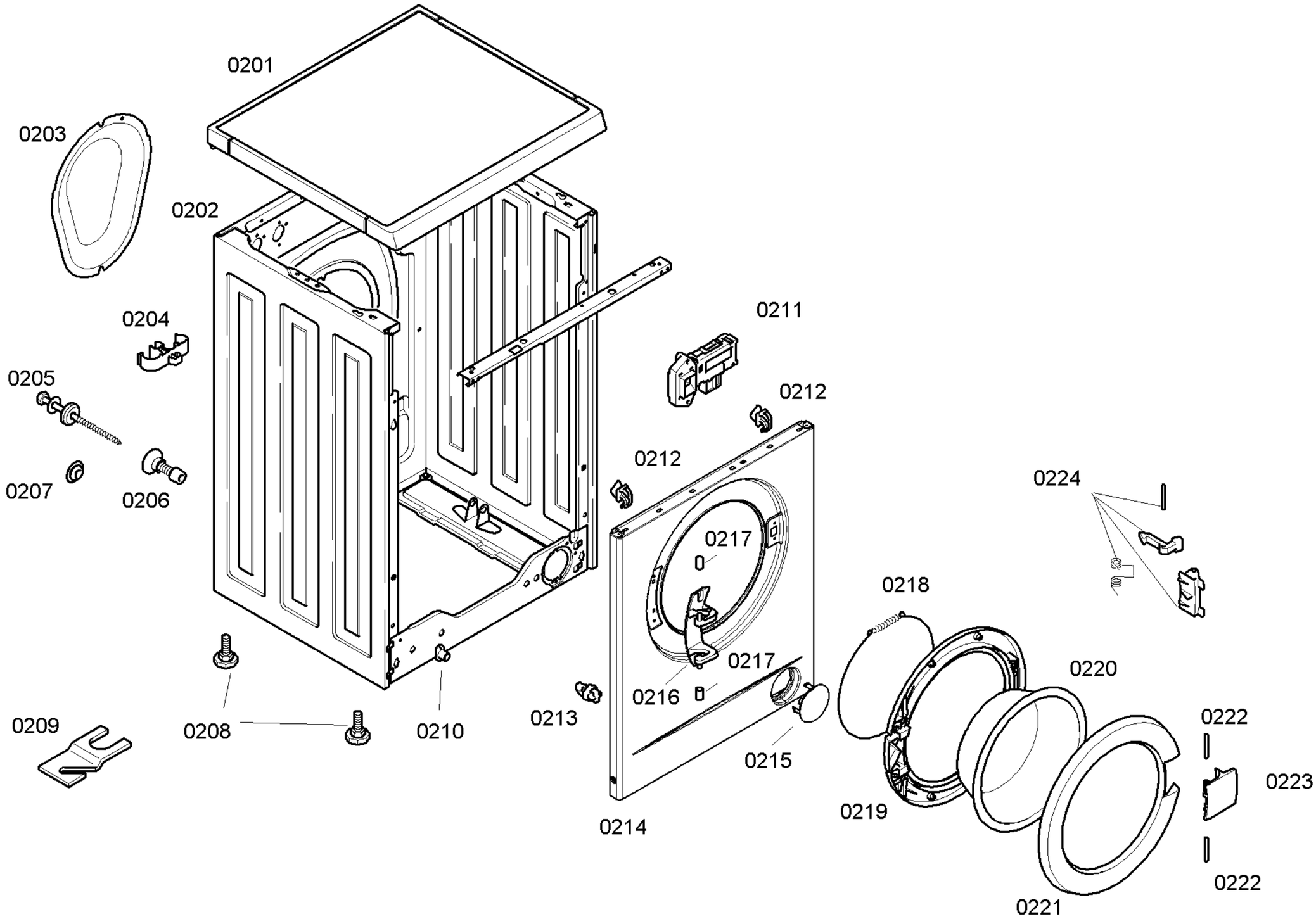

Copyright © (2017) by Lynx / 205502

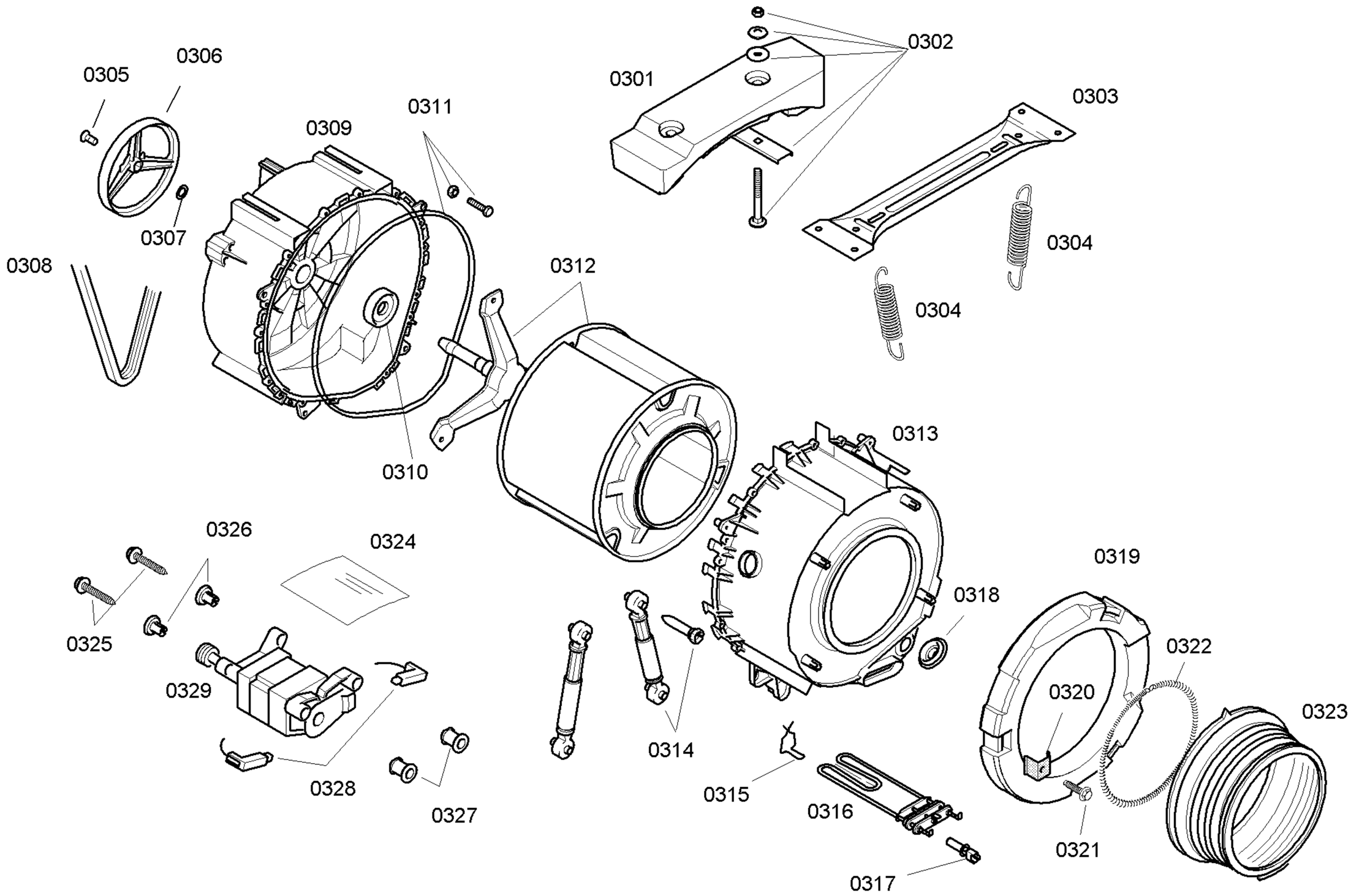

Copyright © (2017) by Lynx / 205502

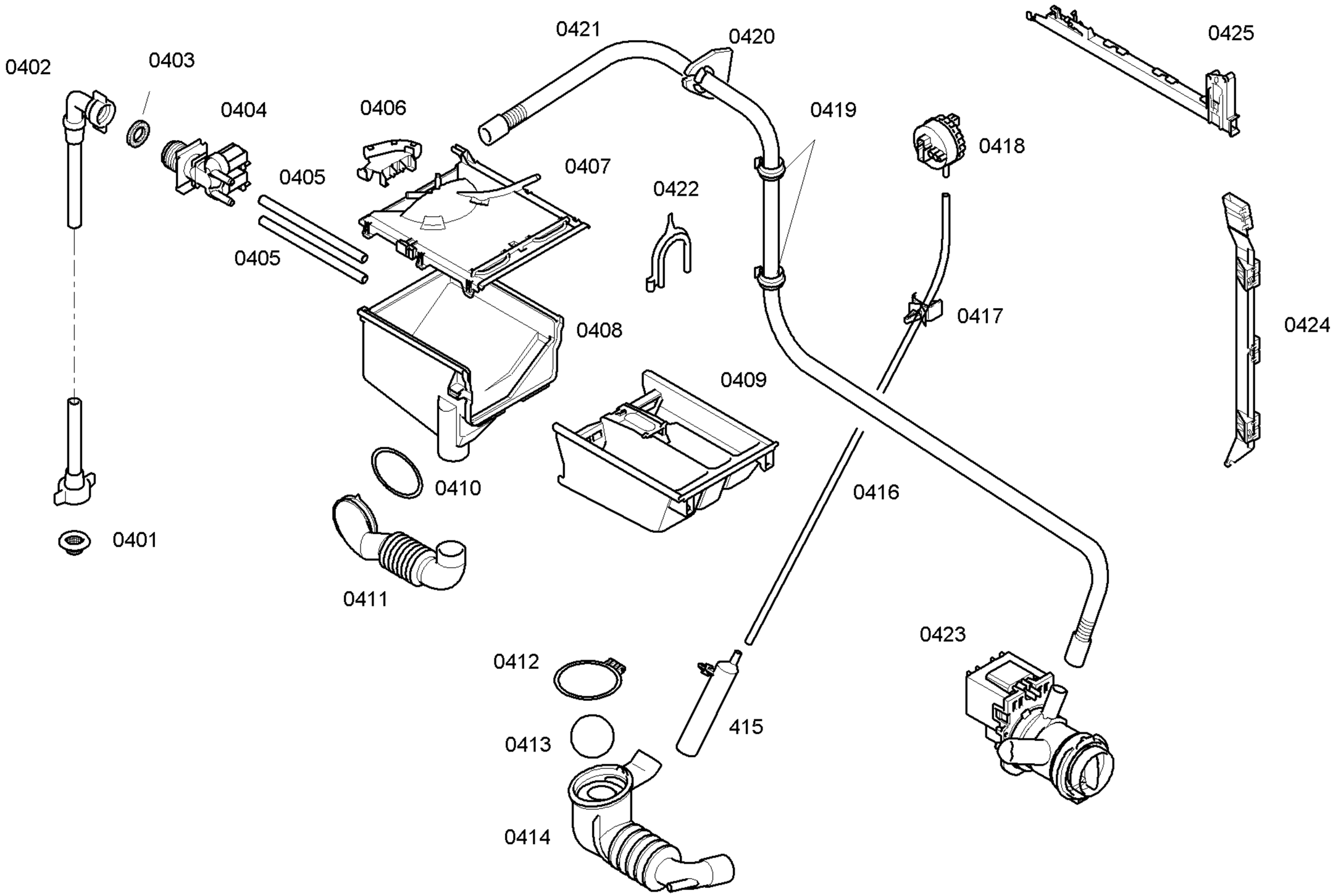

Copyright © (2017) by Lynx / 205502