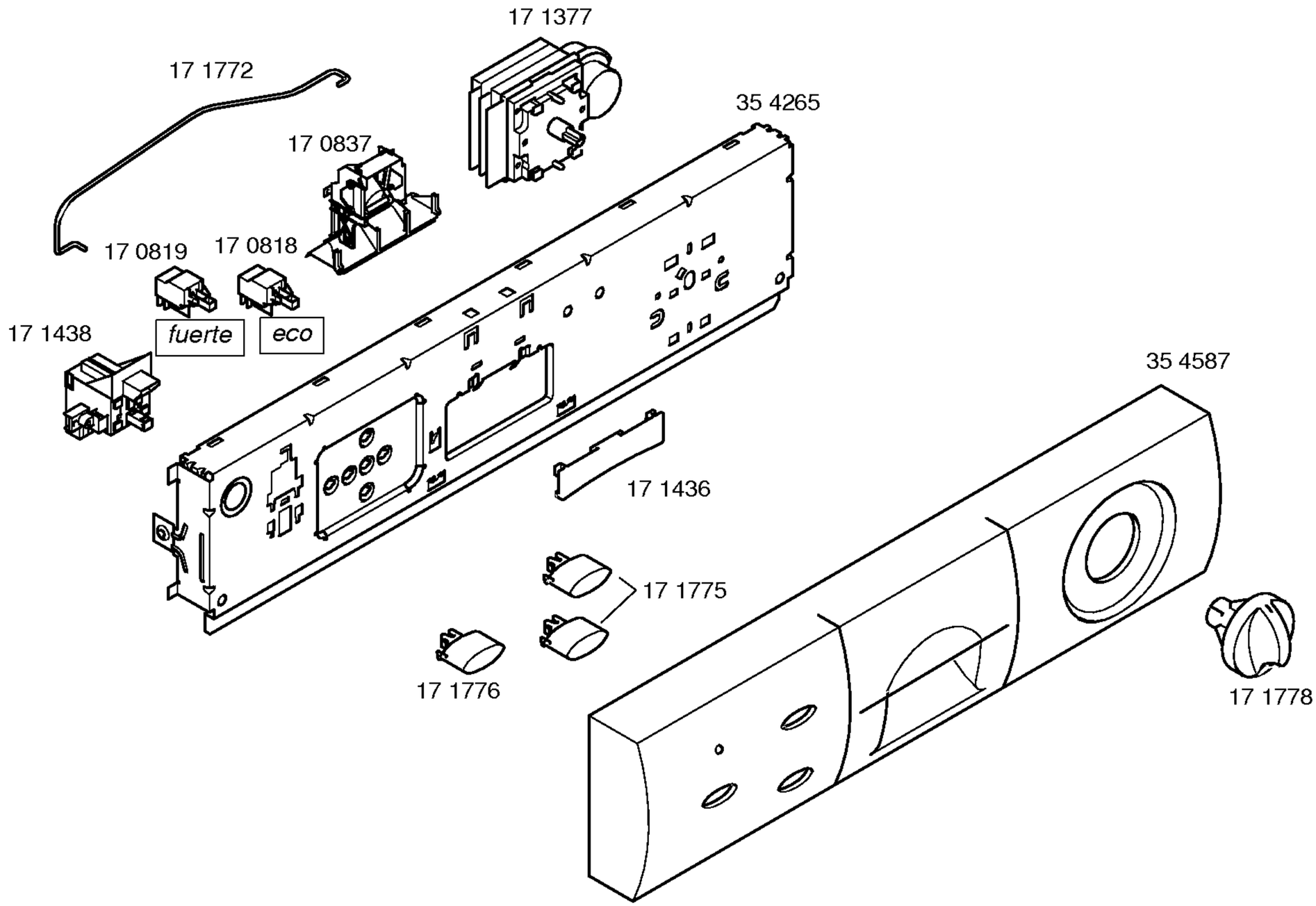

Libro de instrucciones
52 3349
(es,pt)

Copyright © (2020) by Lynx / 205502

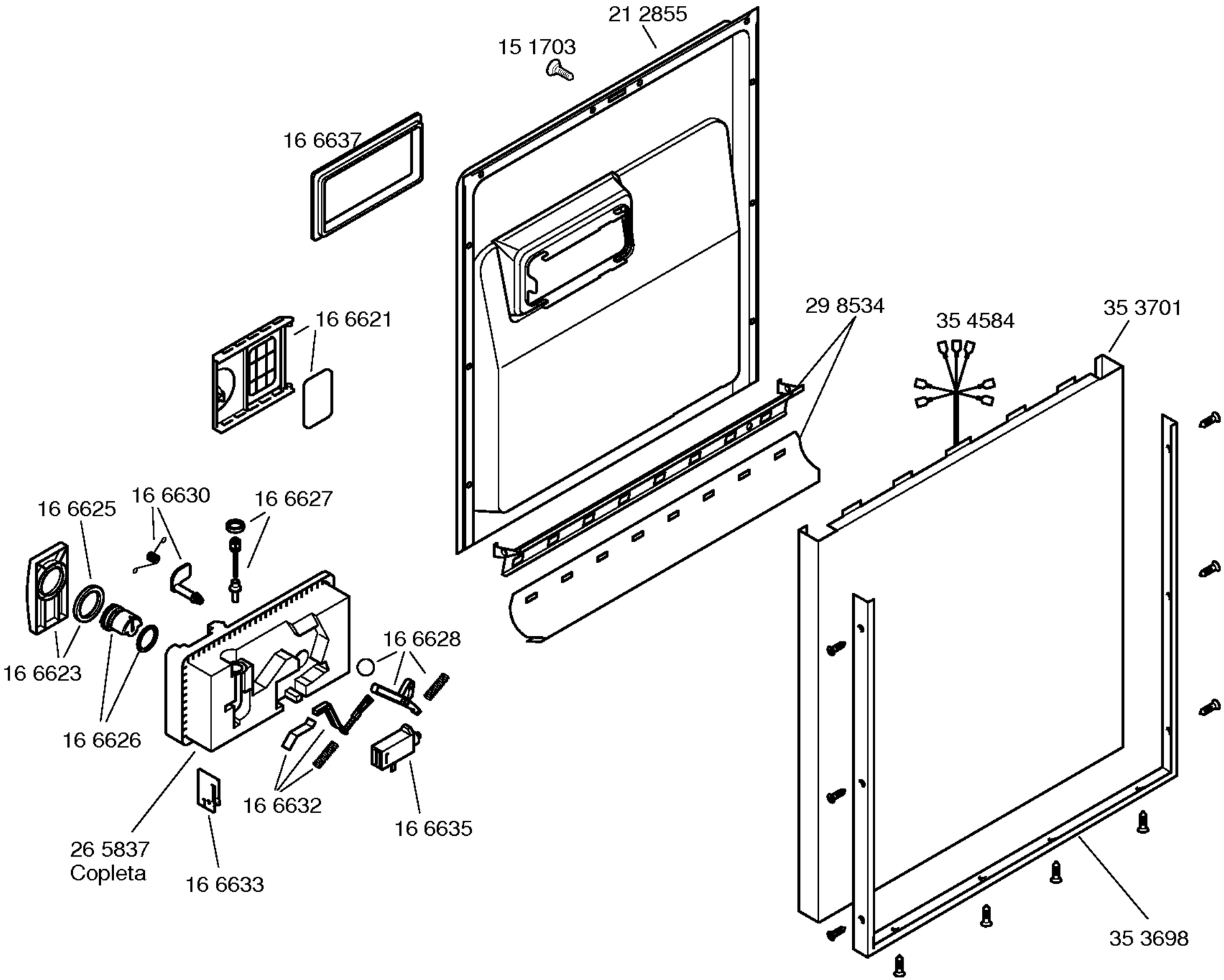

G 15

eu60031-6/2

Copyright © (2020) by Lynx / 205502

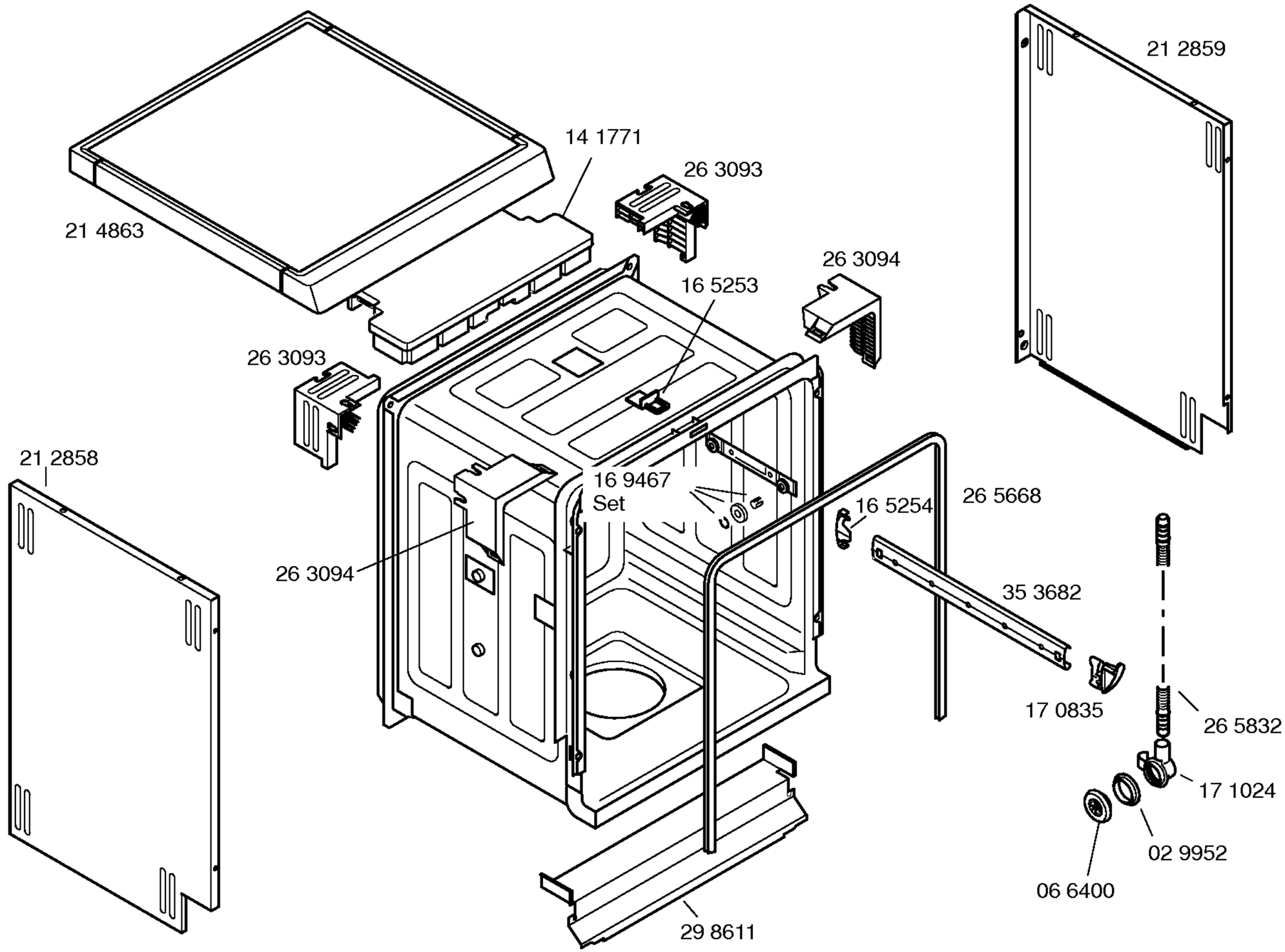

G 16

eu60031 -6/3

Copyright © (2020) by Lynx / 205502

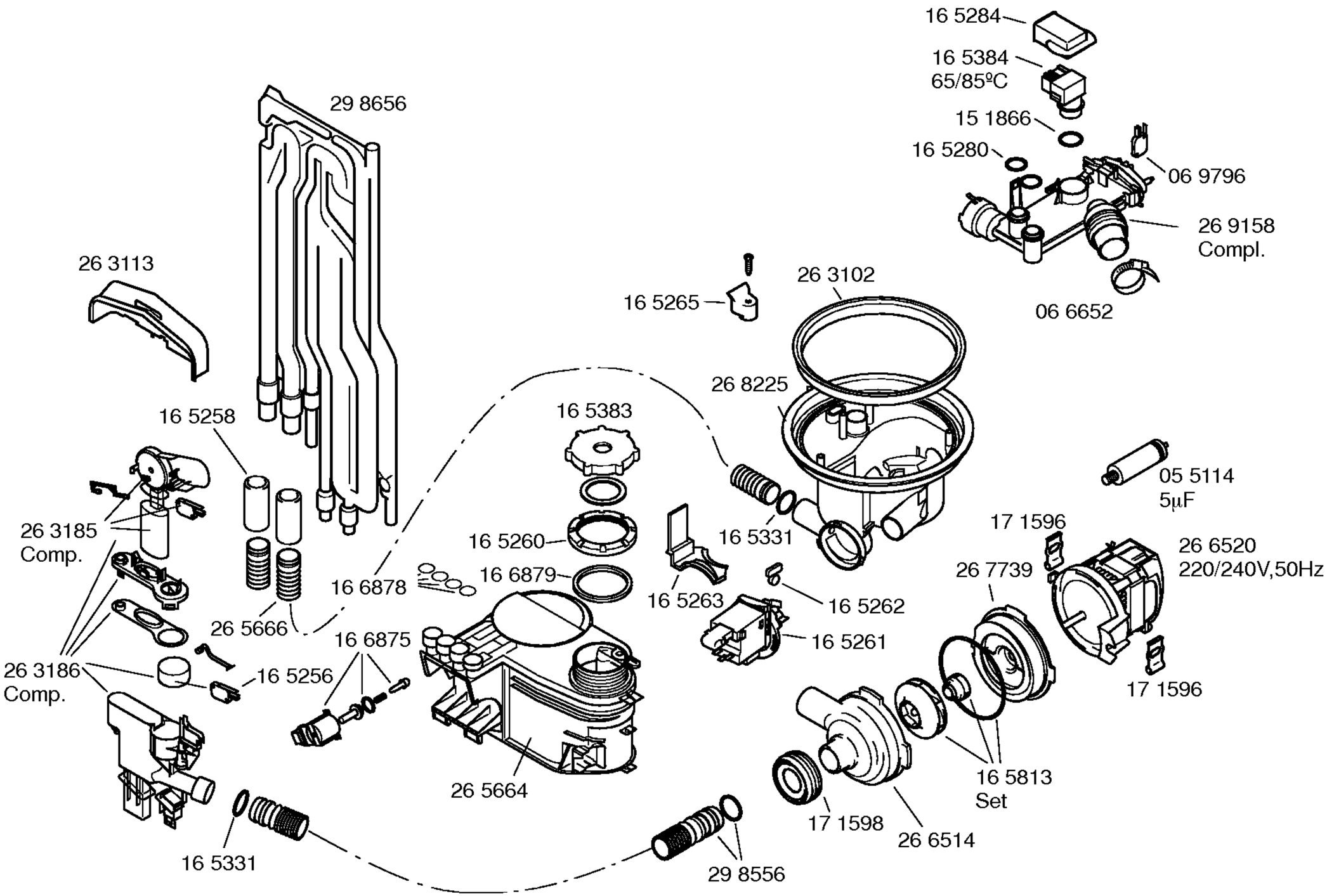

eu60031-6/4

Copyright © (2020) by Lynx / 205502

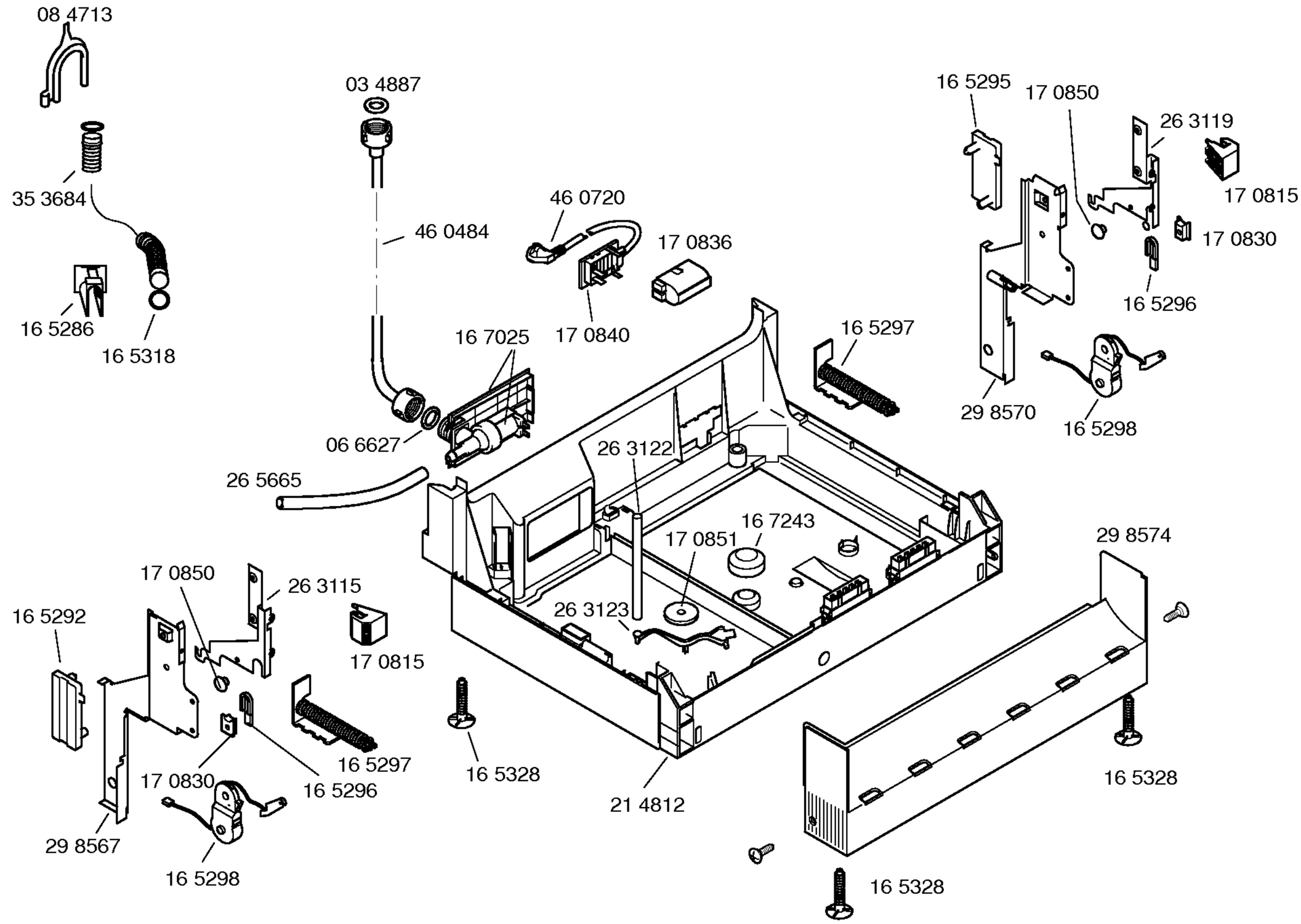

eu60031 -6/5

Copyright © (2020) by Lynx / 205502

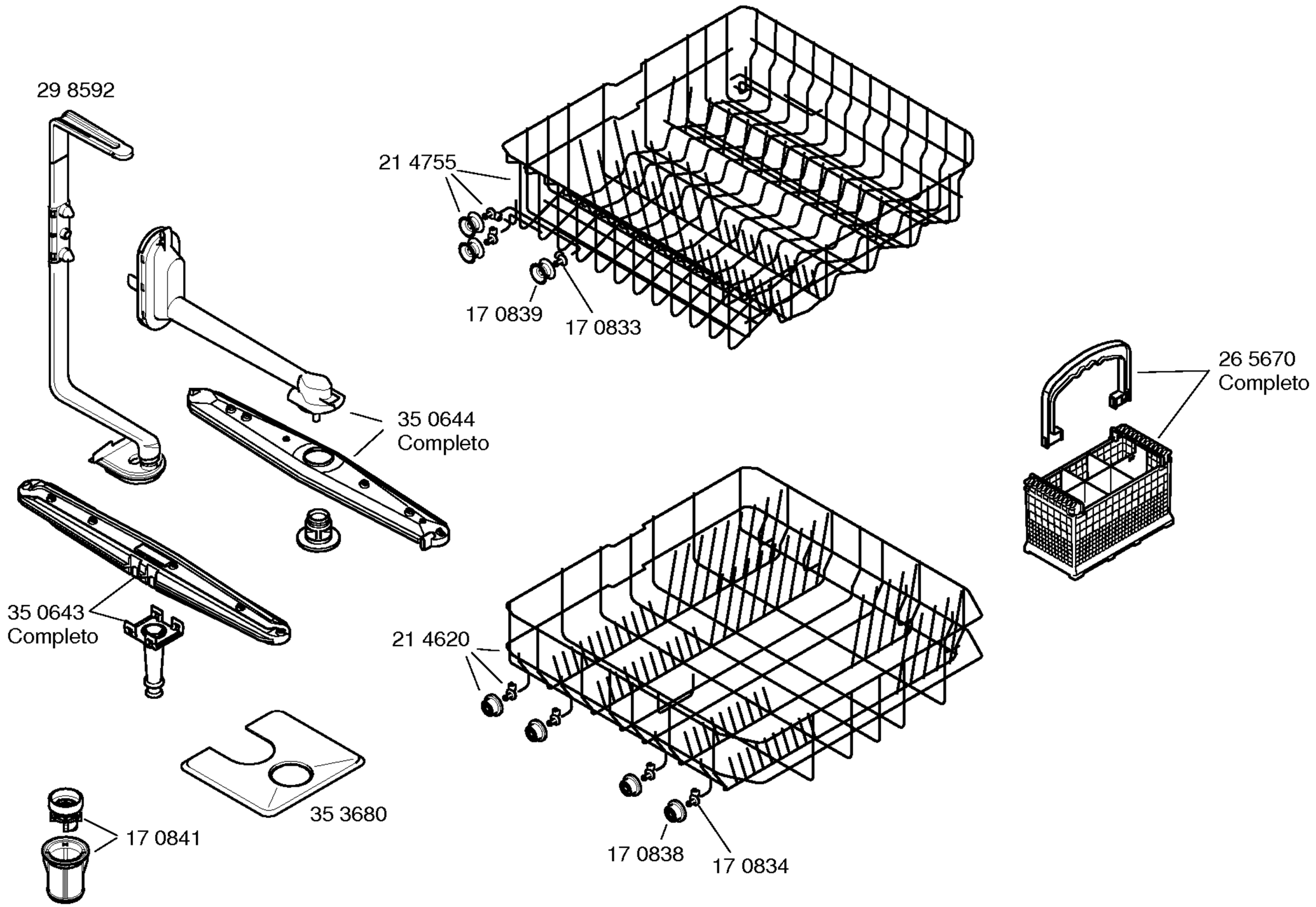

Copyright © (2020) by Lynx / 205502