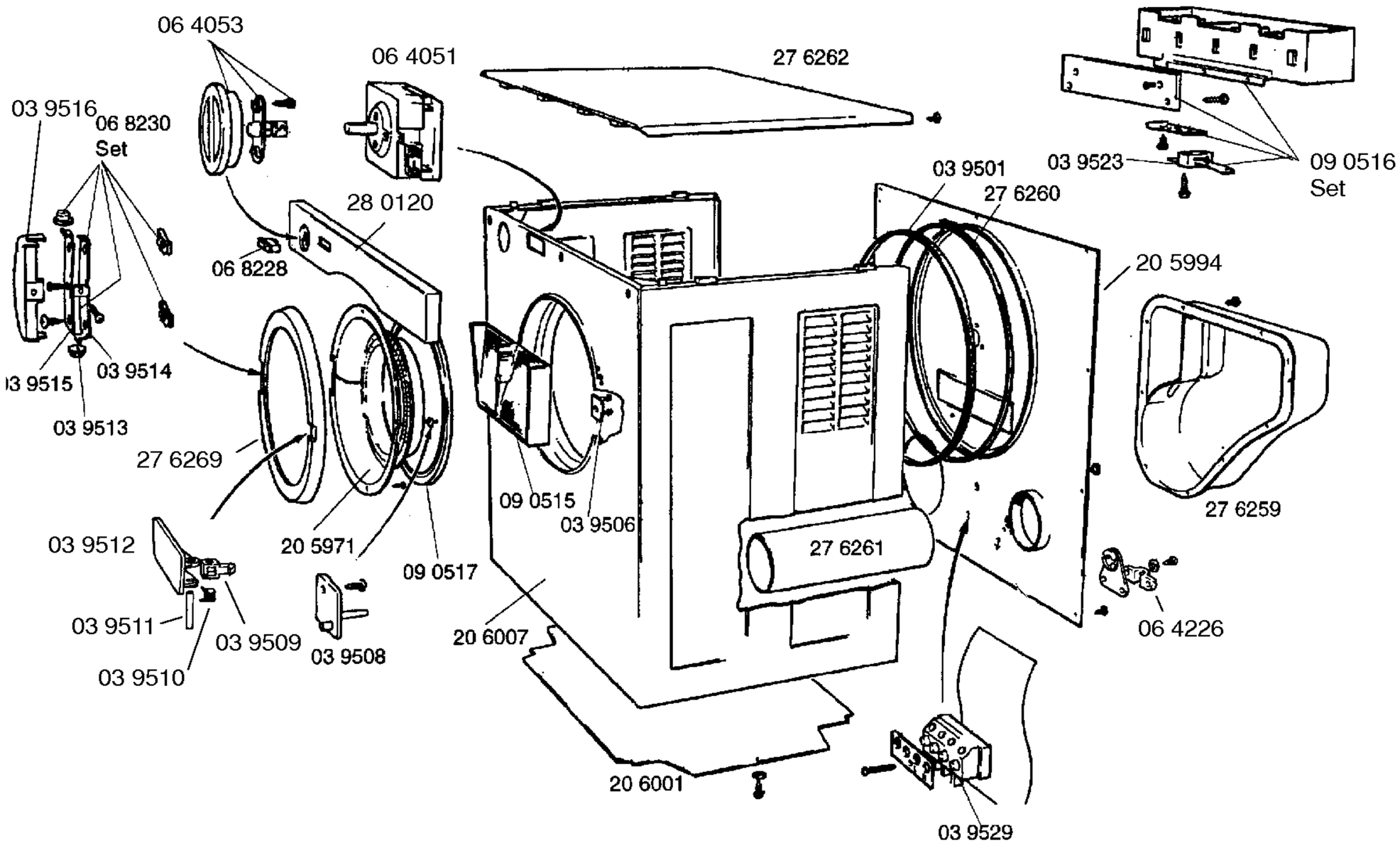




Copyright © ( 2011 ) by Lynx / 205502