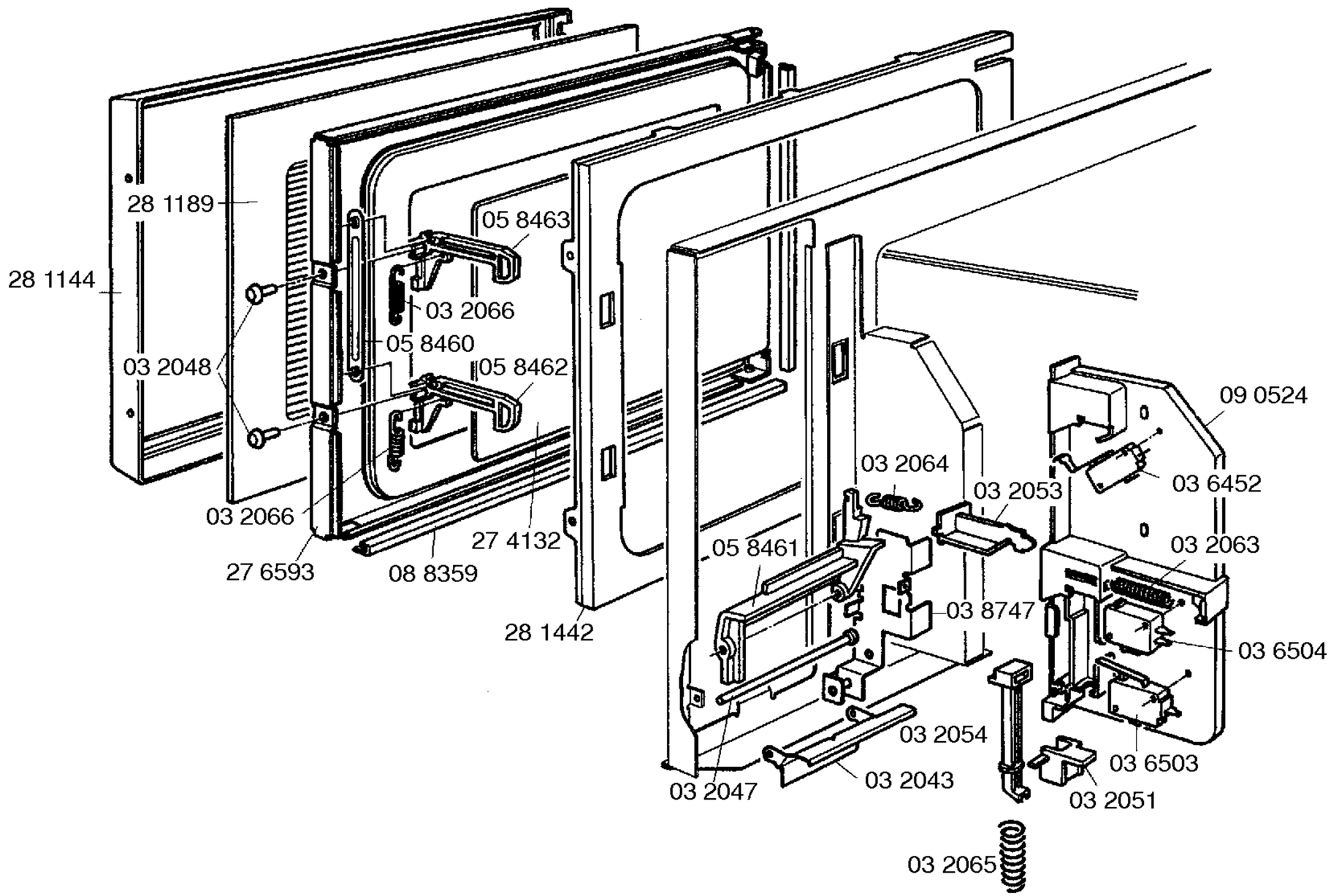




Copyright © ( 2014 ) by Lynx / 205502

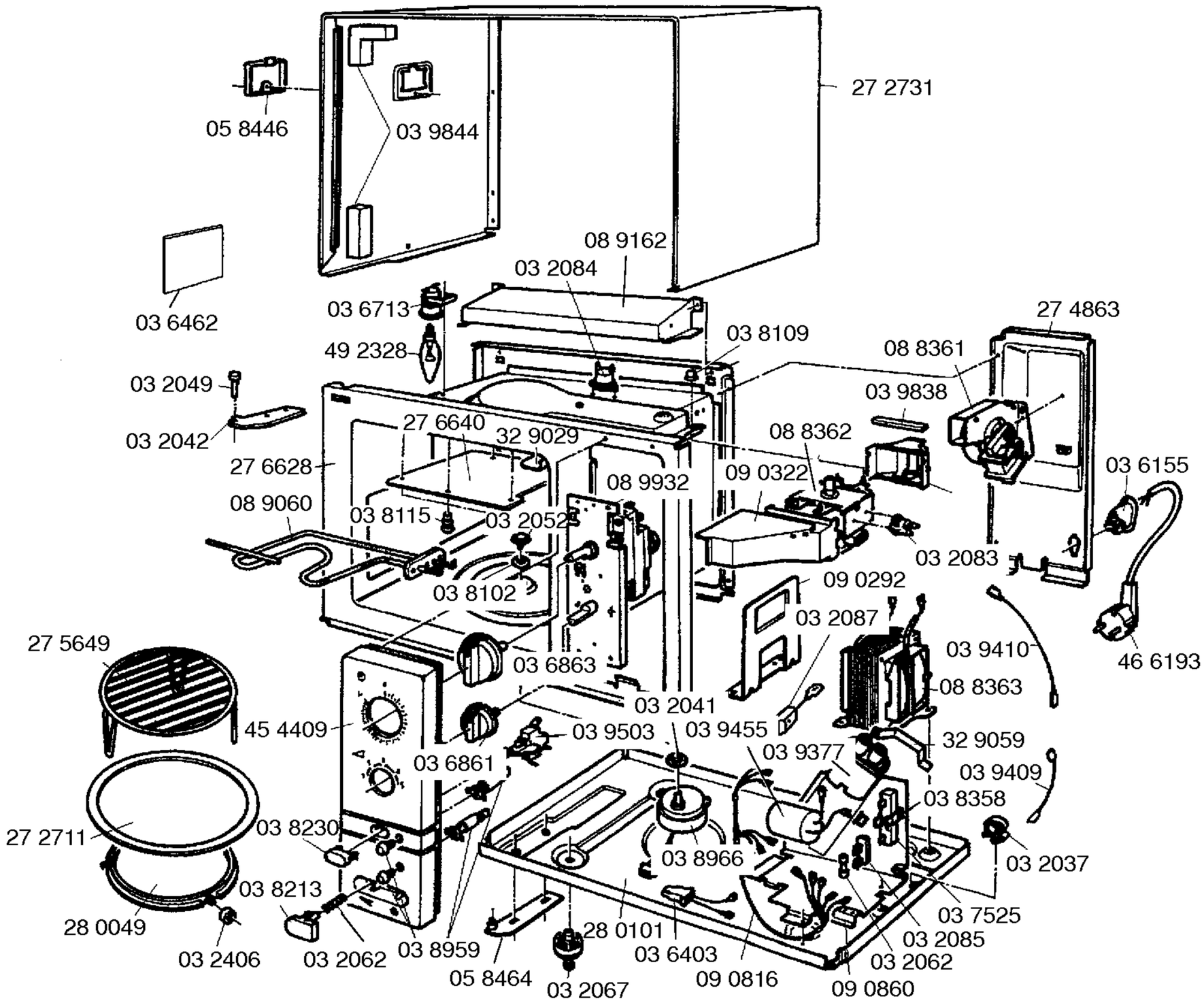




Copyright © ( 2014 ) by Lynx / 205502