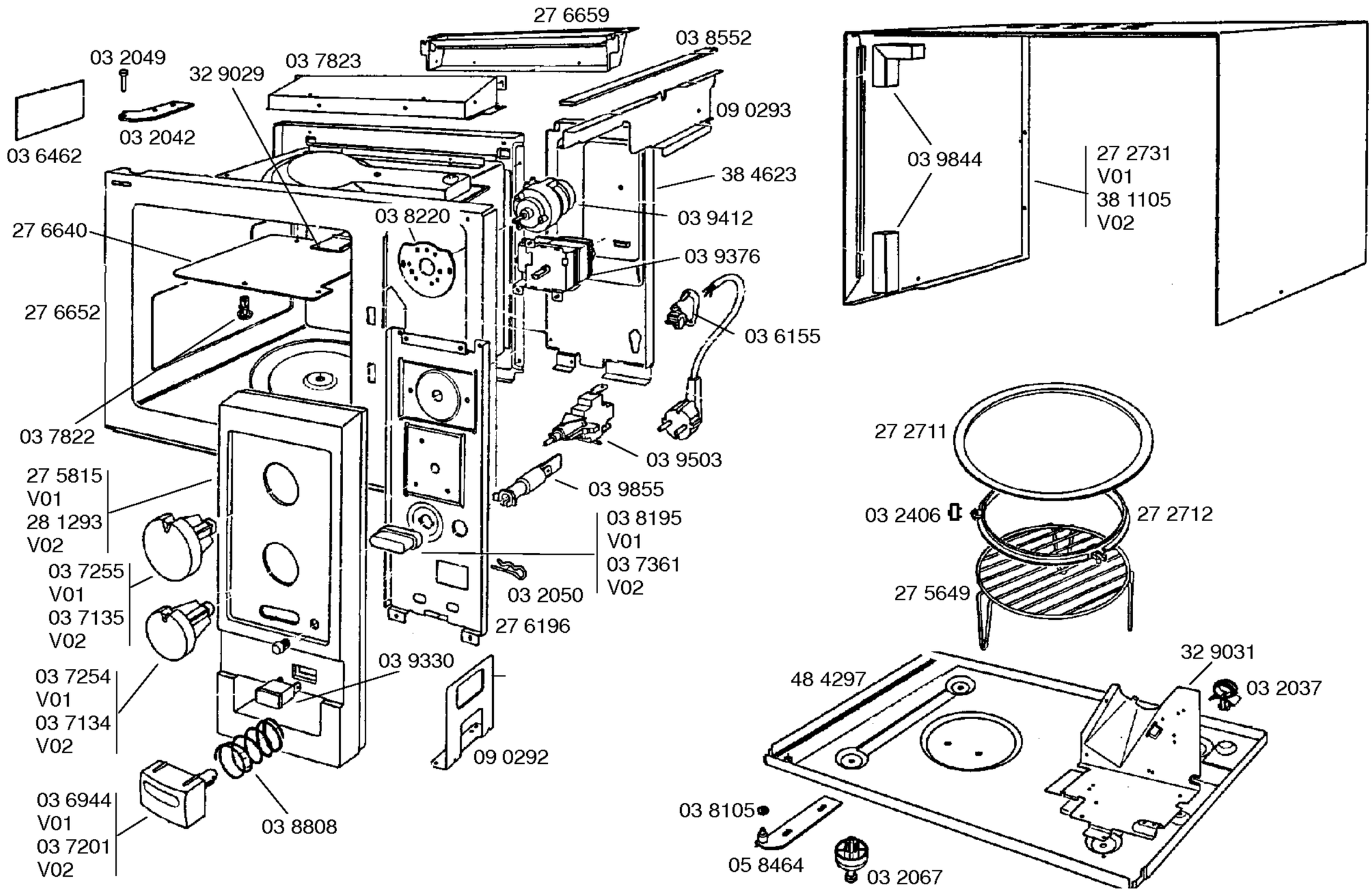

eu30087 -3/1

Copyright © (2011) by Lynx / 205502

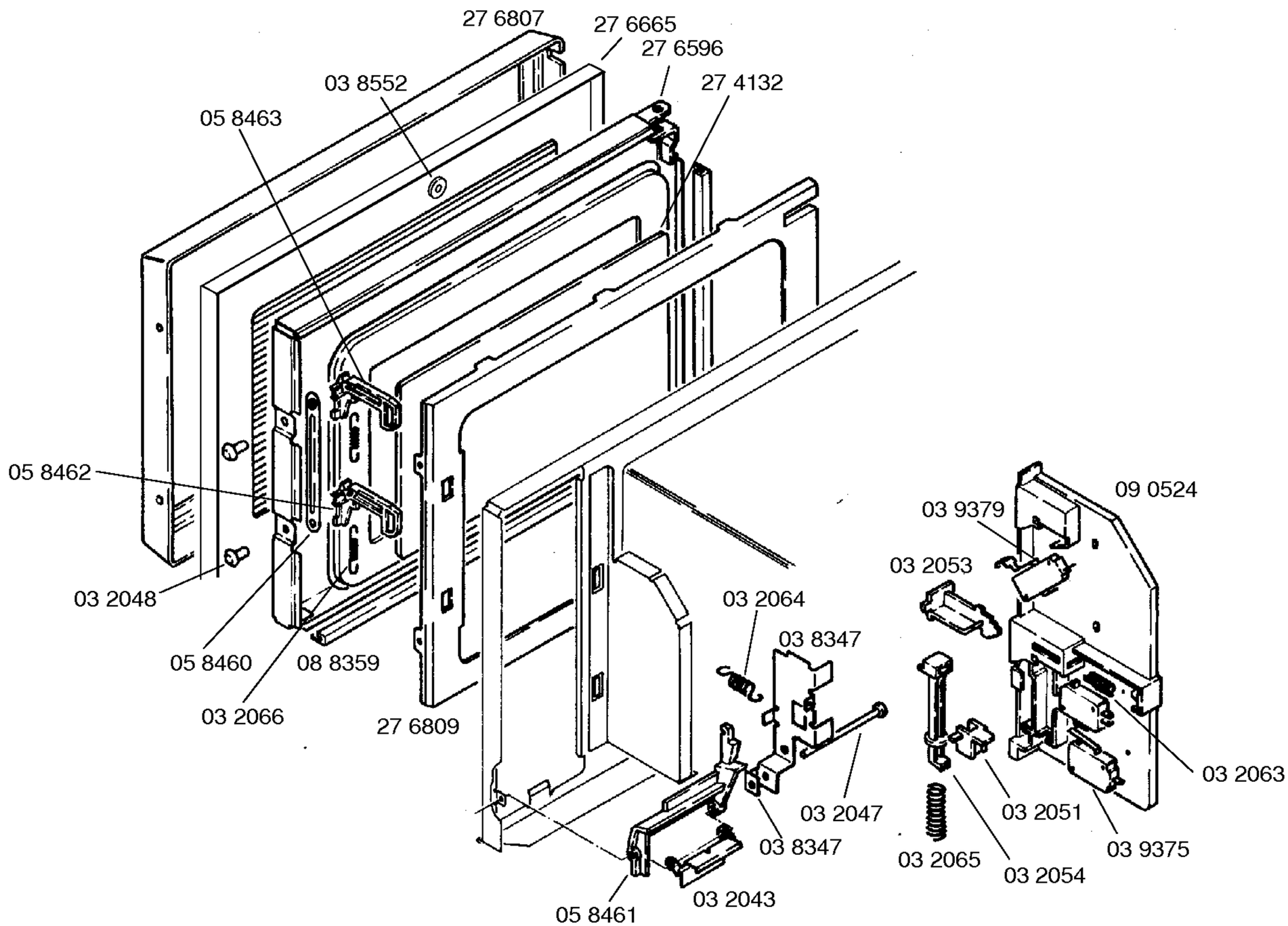

Copyright © (2011) by Lynx / 205502

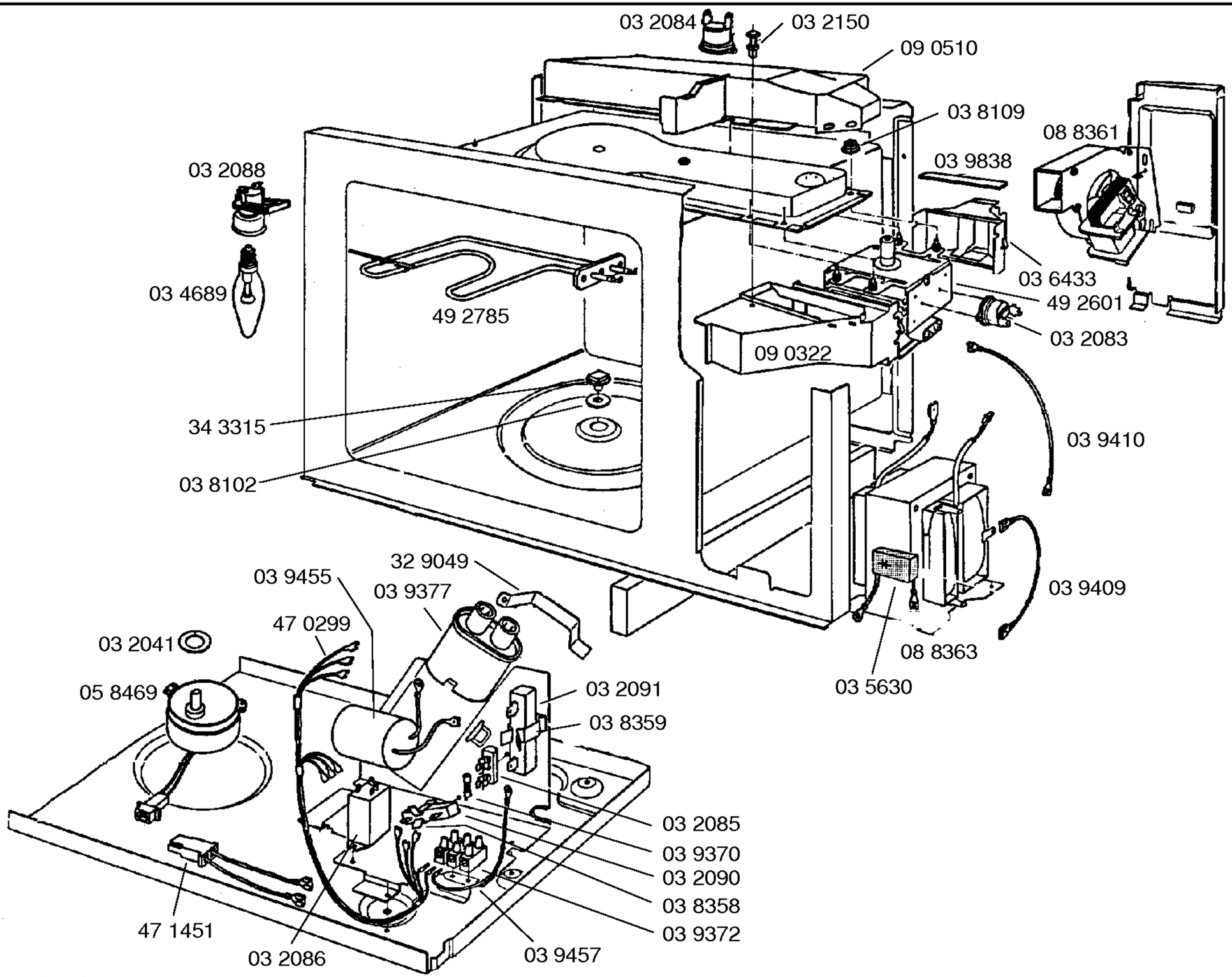

eu30087 -3/3

Copyright © (2011) by Lynx / 205502