0199

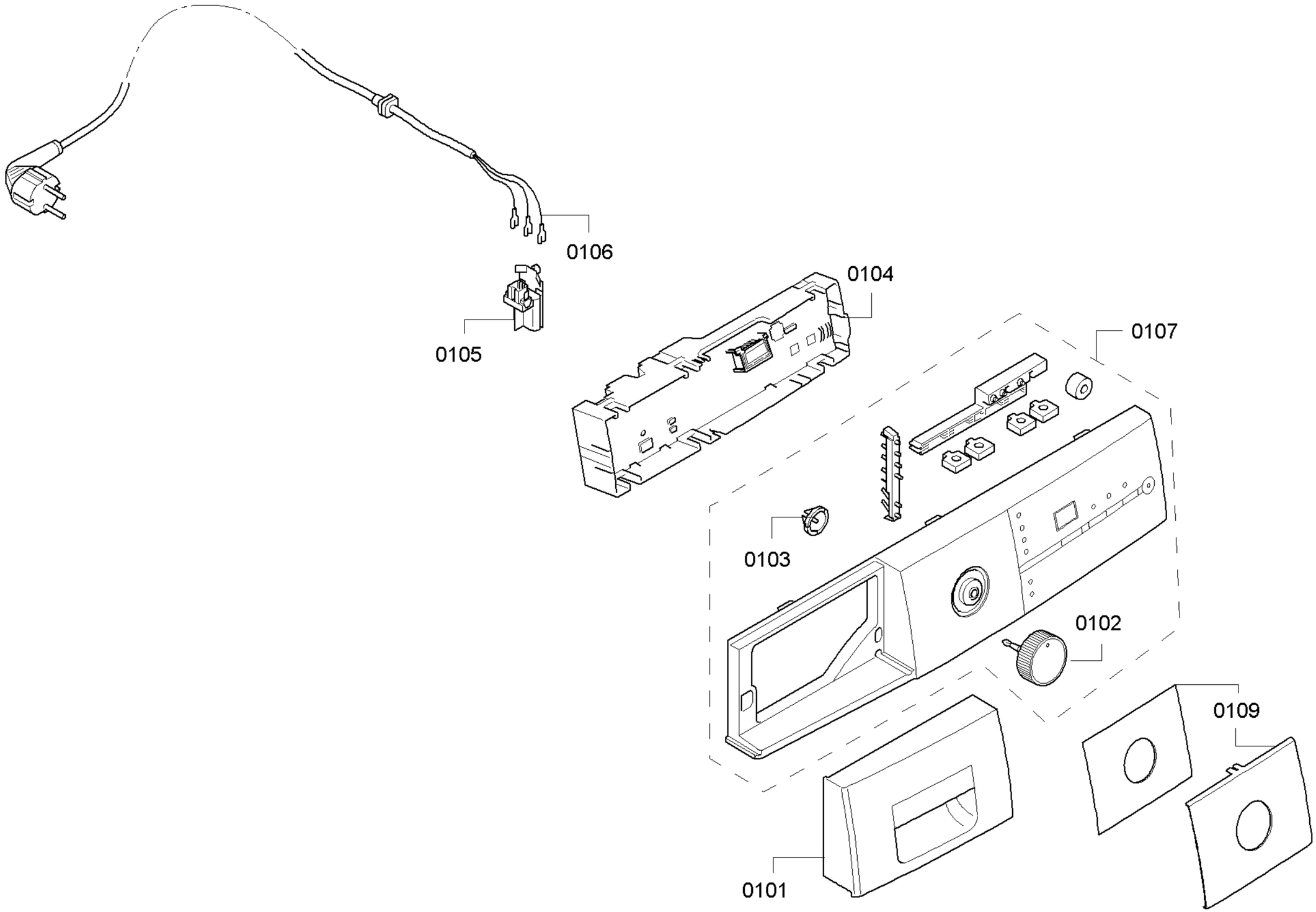

Copyright © (2014) by Neff / ESHOP_12_6

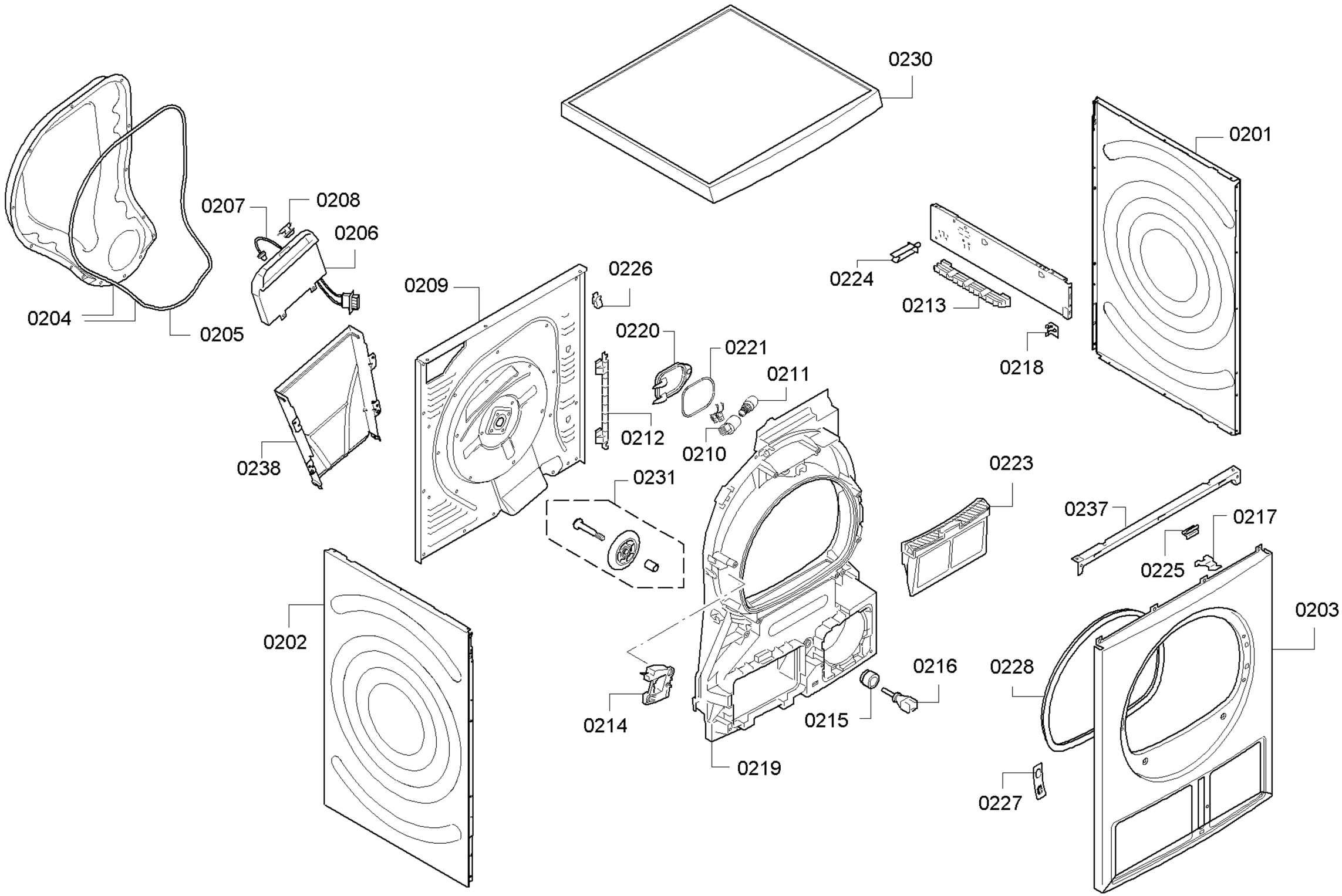

Copyright © (2014) by Neff / ESHOP_12_6

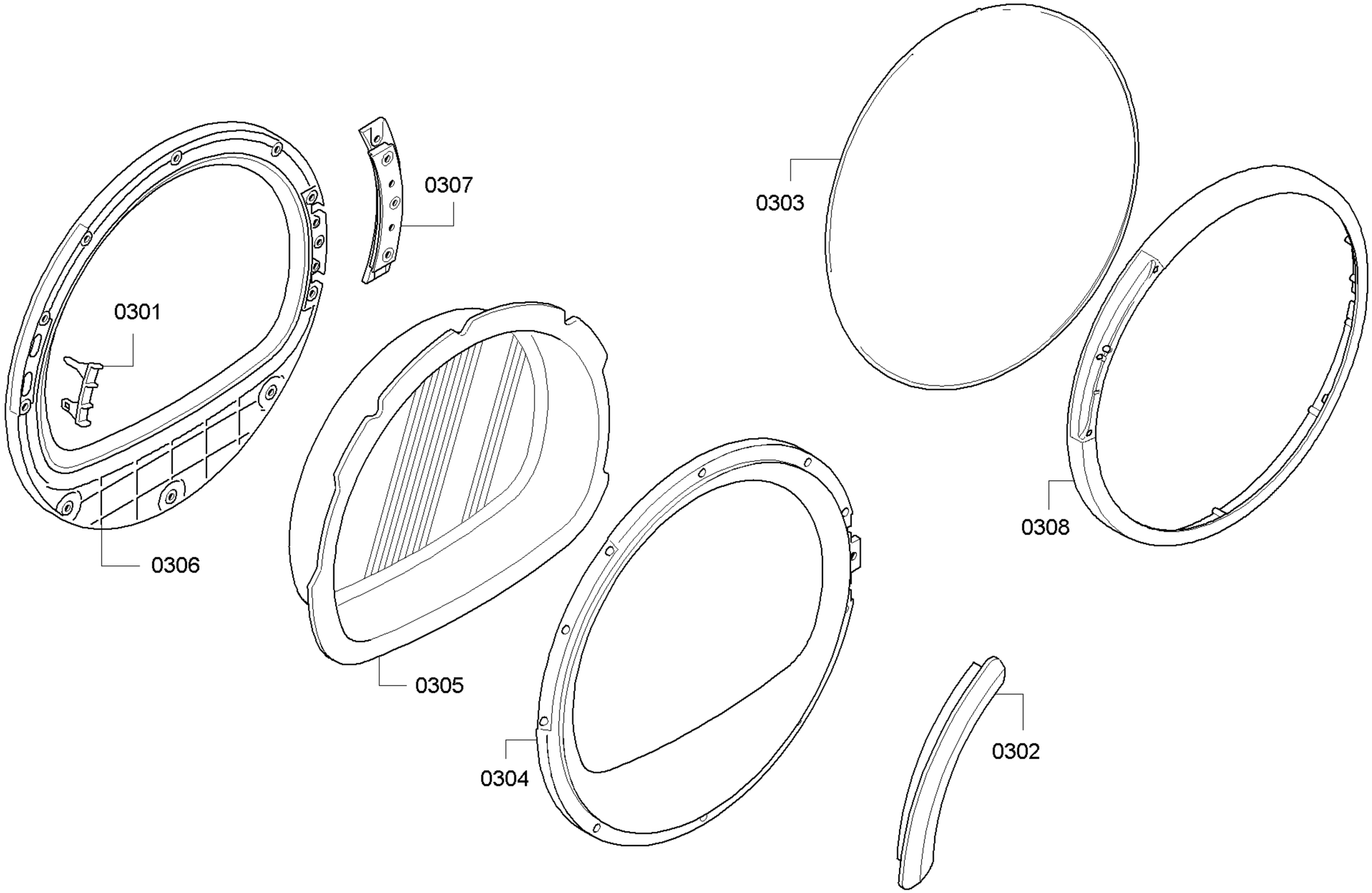

Copyright © (2014) by Neff / ESHOP_12_6

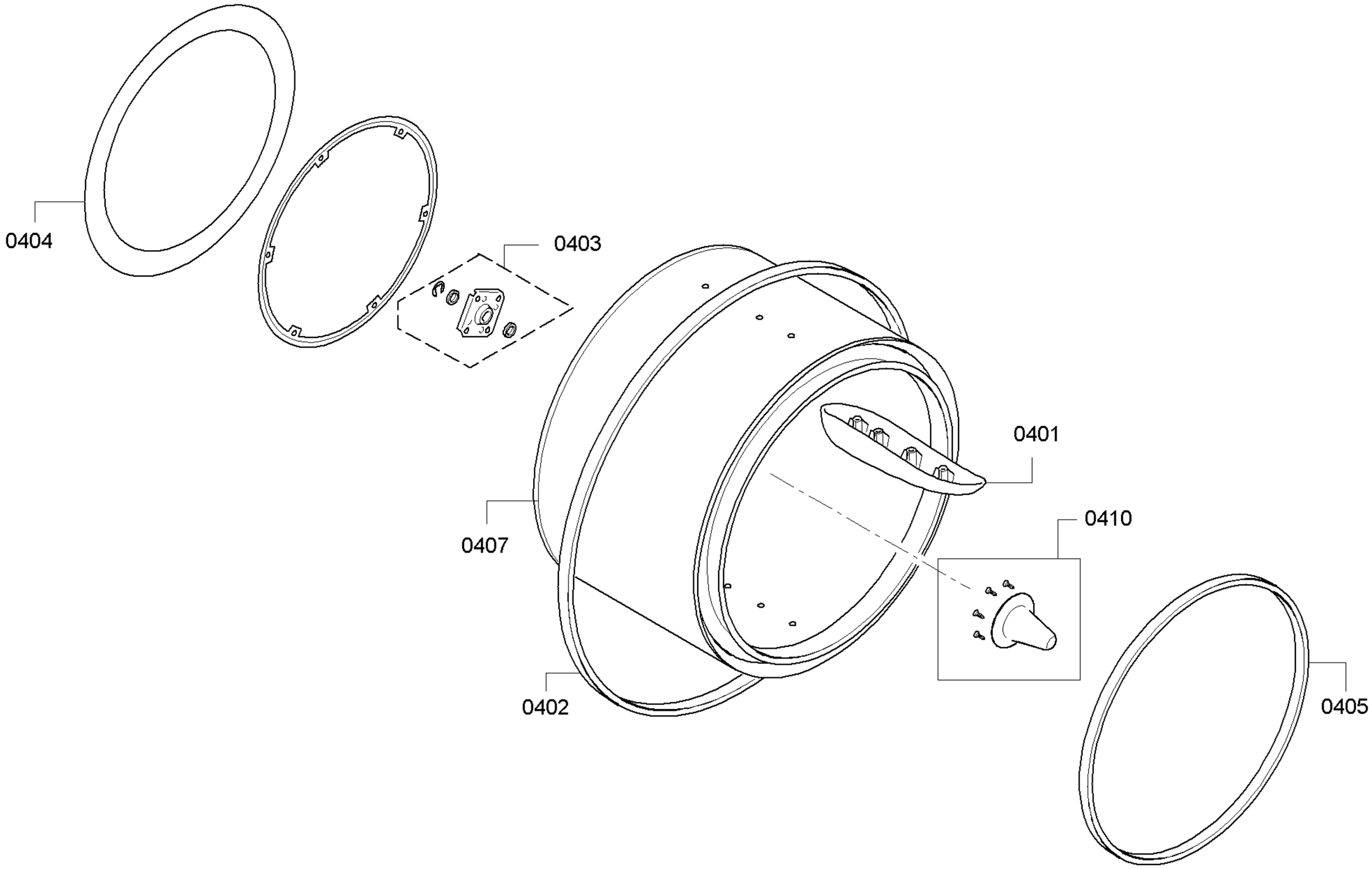

Copyright © (2014) by Neff / ESHOP_12_6

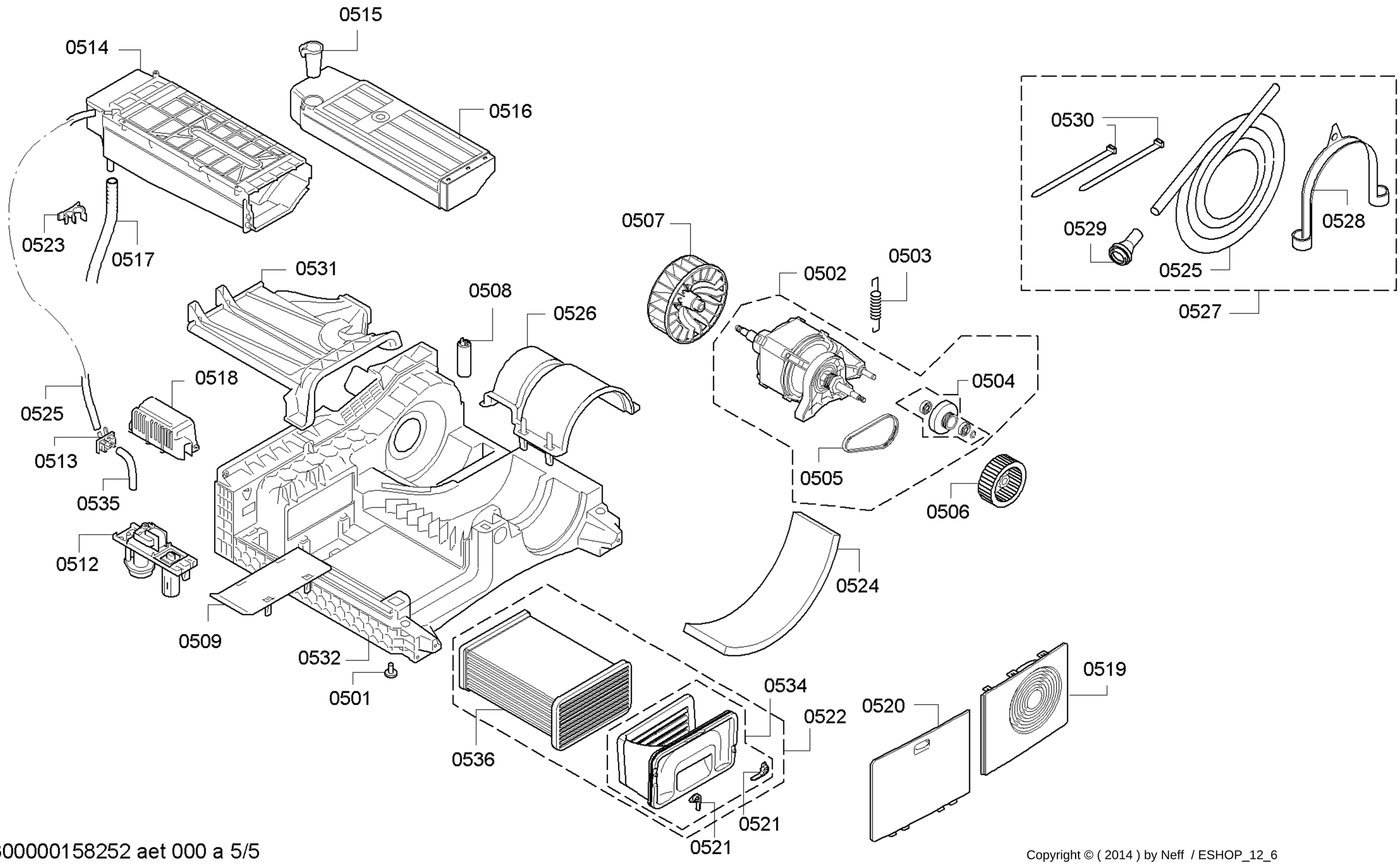

Copyright © (2014) by Neff / ESHOP_12_6