EXPLODED VIEW AND PARTS LIST

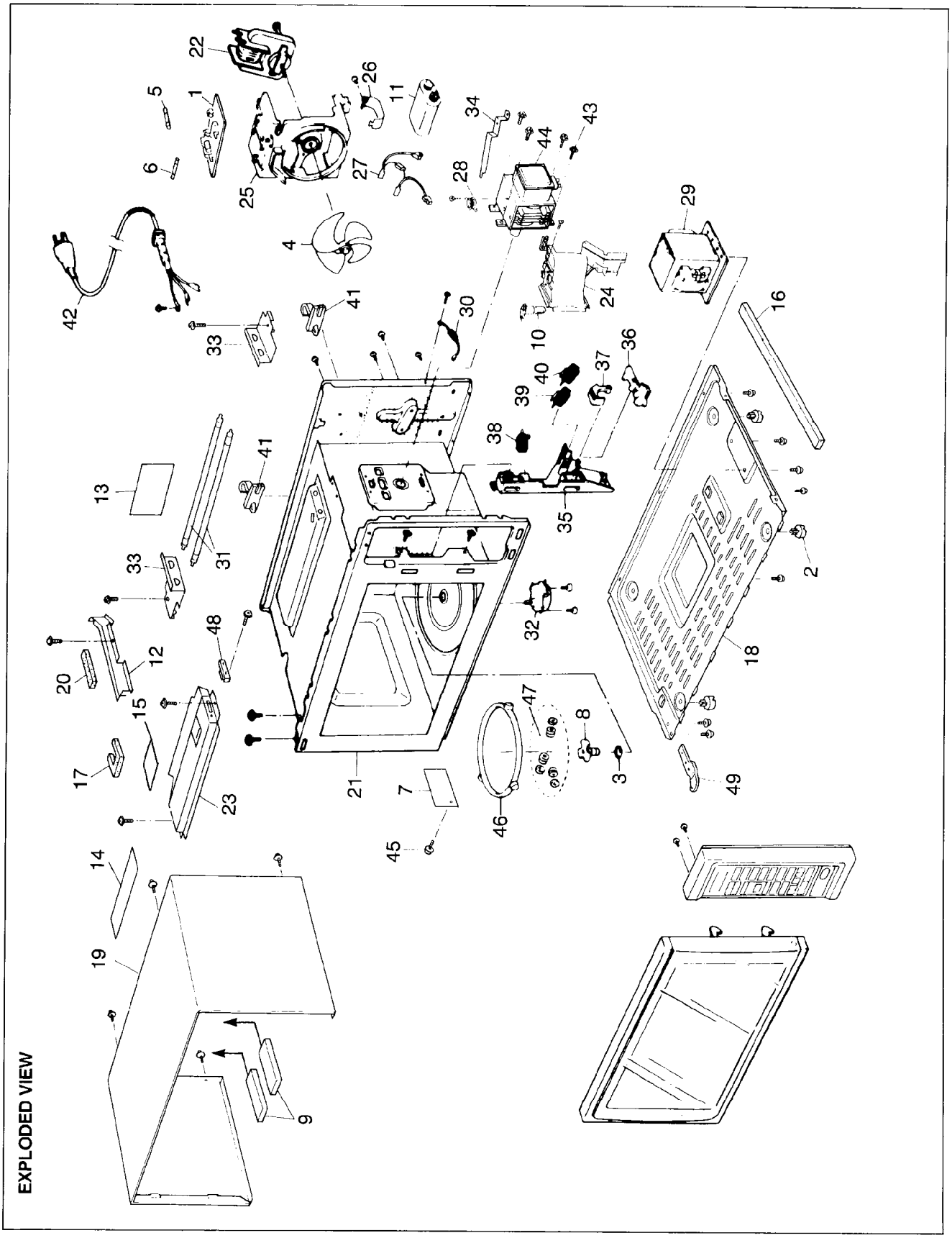

DOOR ASSEMBLY

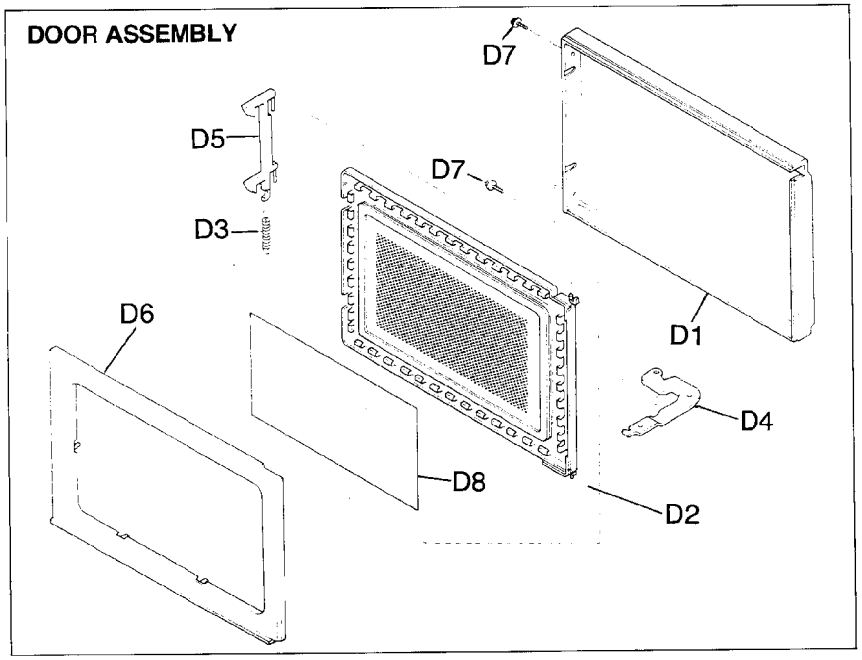

ESCUTCHEON BASE ASSEMBLY

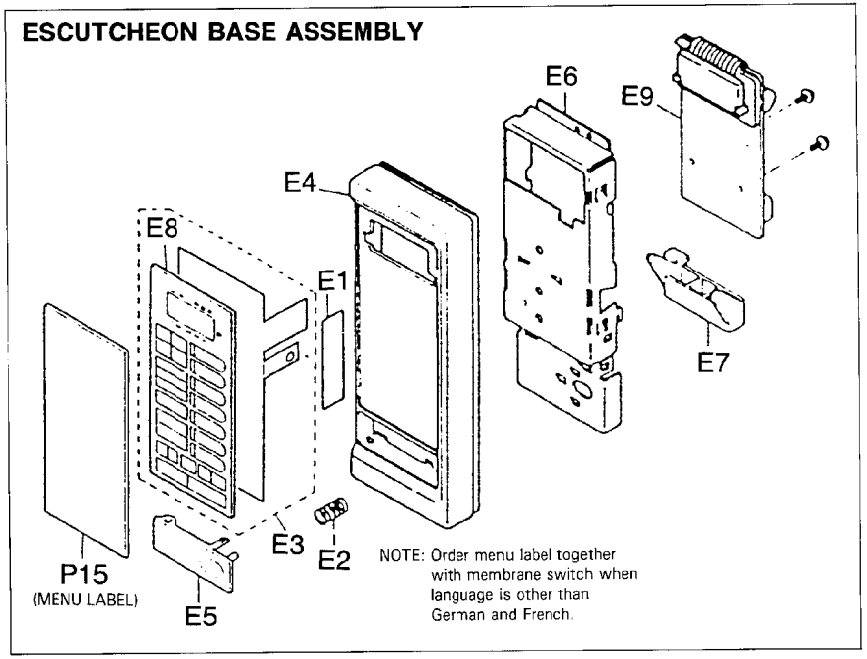

PACKING AND ACCESSORIES

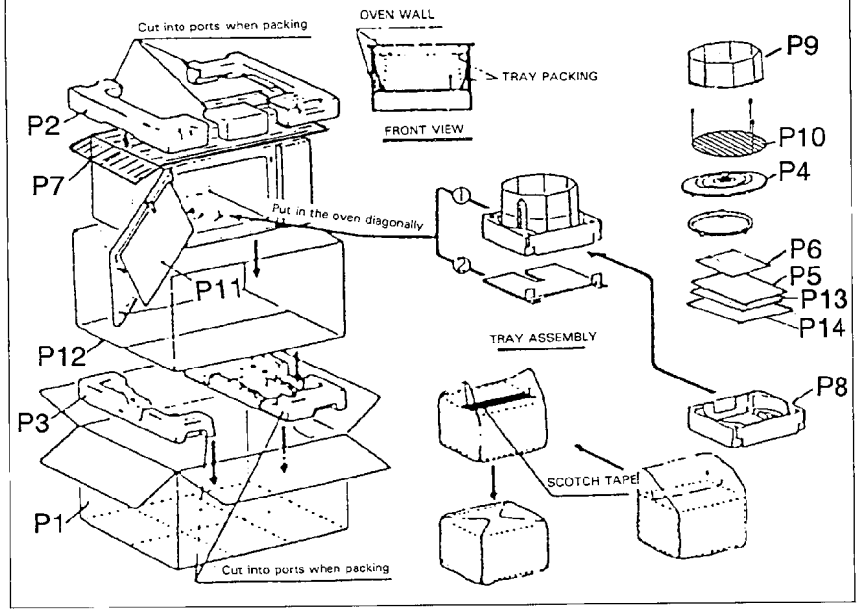
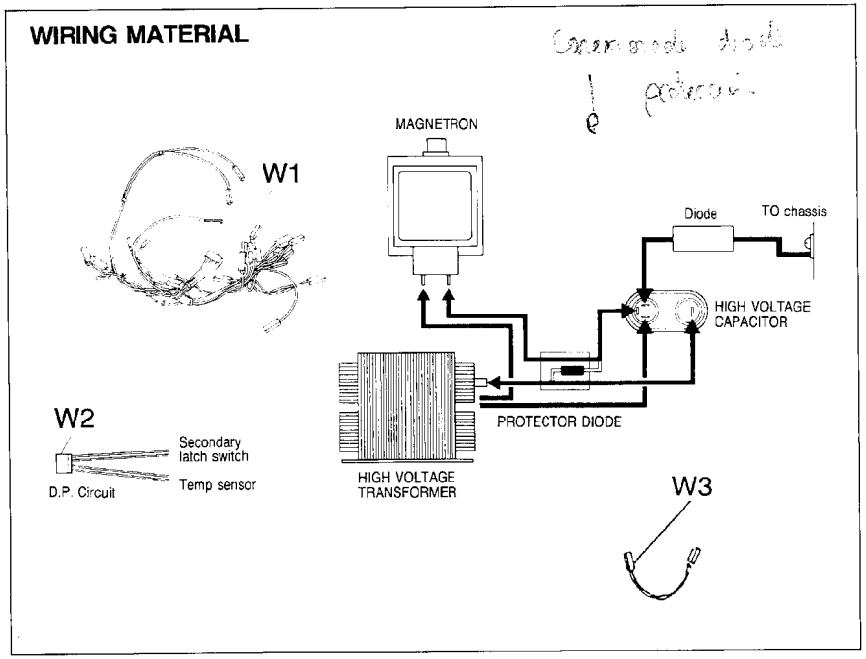
WIRING MATERIAL