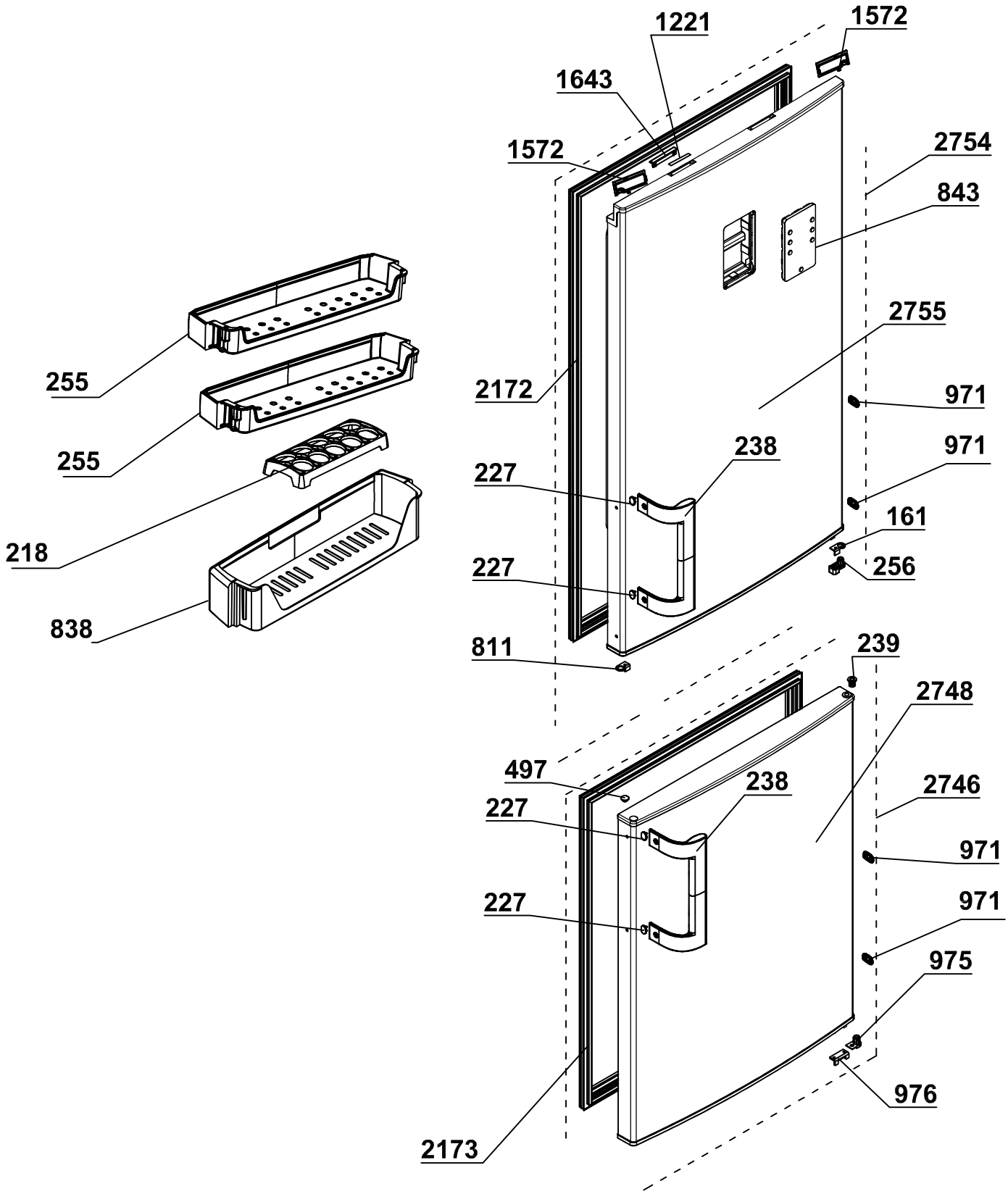

Product code: 7517020089	Model: COMBI K60365NE	Appendix: 2
CT186NFW SAIVOD		Revision: 00
Ciprian Condea - PDD		22.02.2017