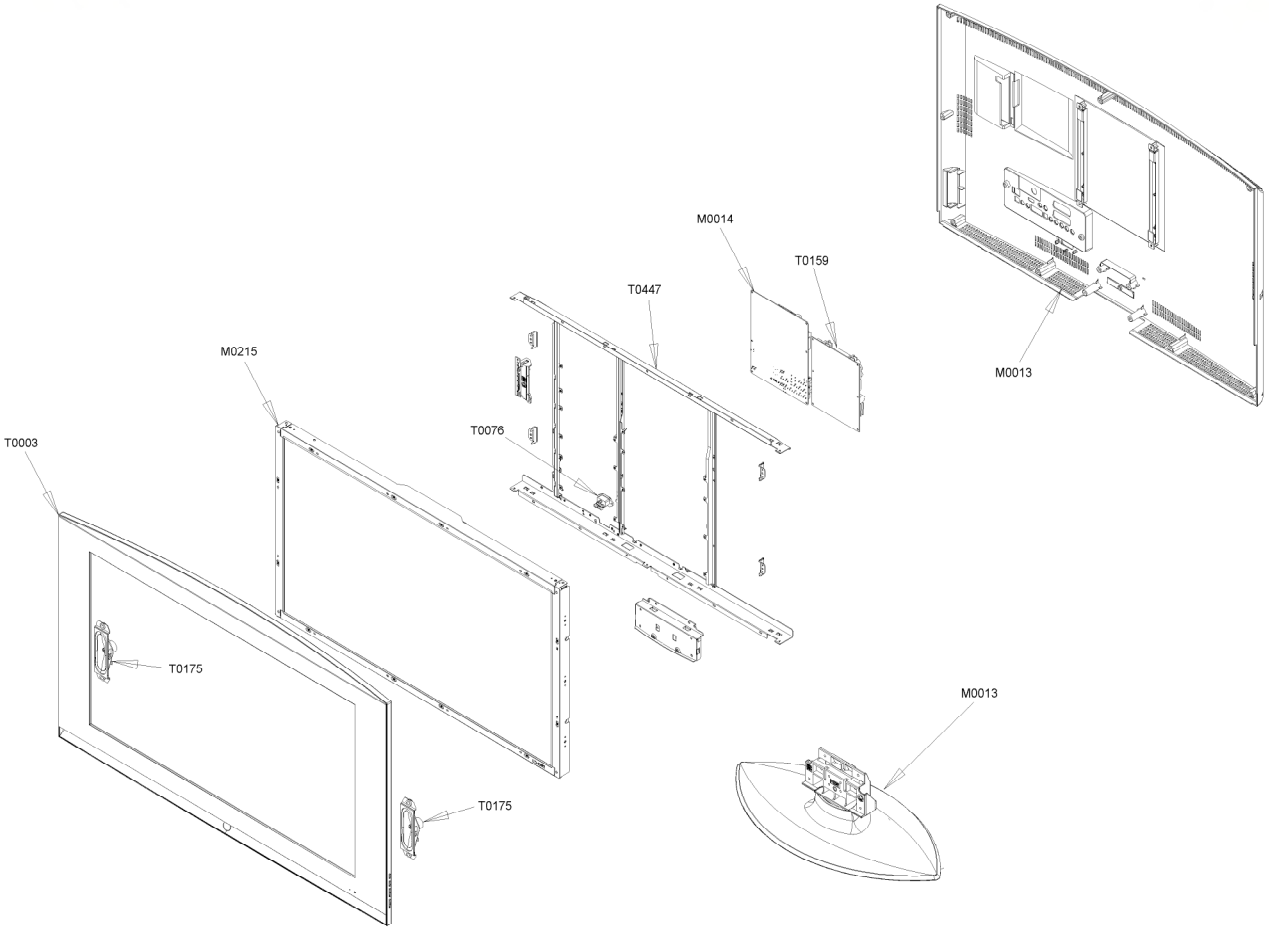


출력P05010713370OC100056처리파트너********71:20060821160456