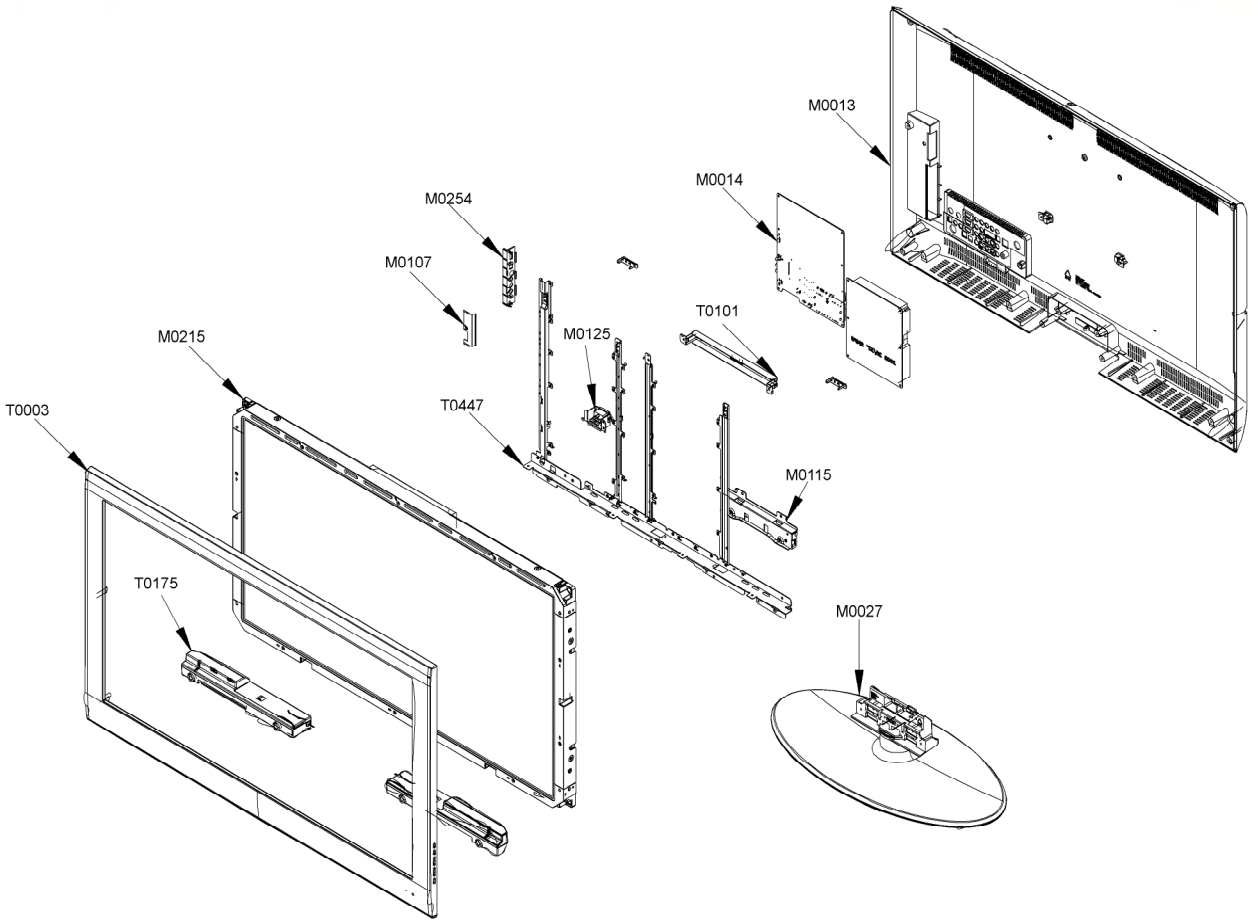
M0013
M0014
M0254
M0107
T0101
M0125
M0215
T0003
T0447
M0115
T0175
M0027