5-1 Cabinet Assembly

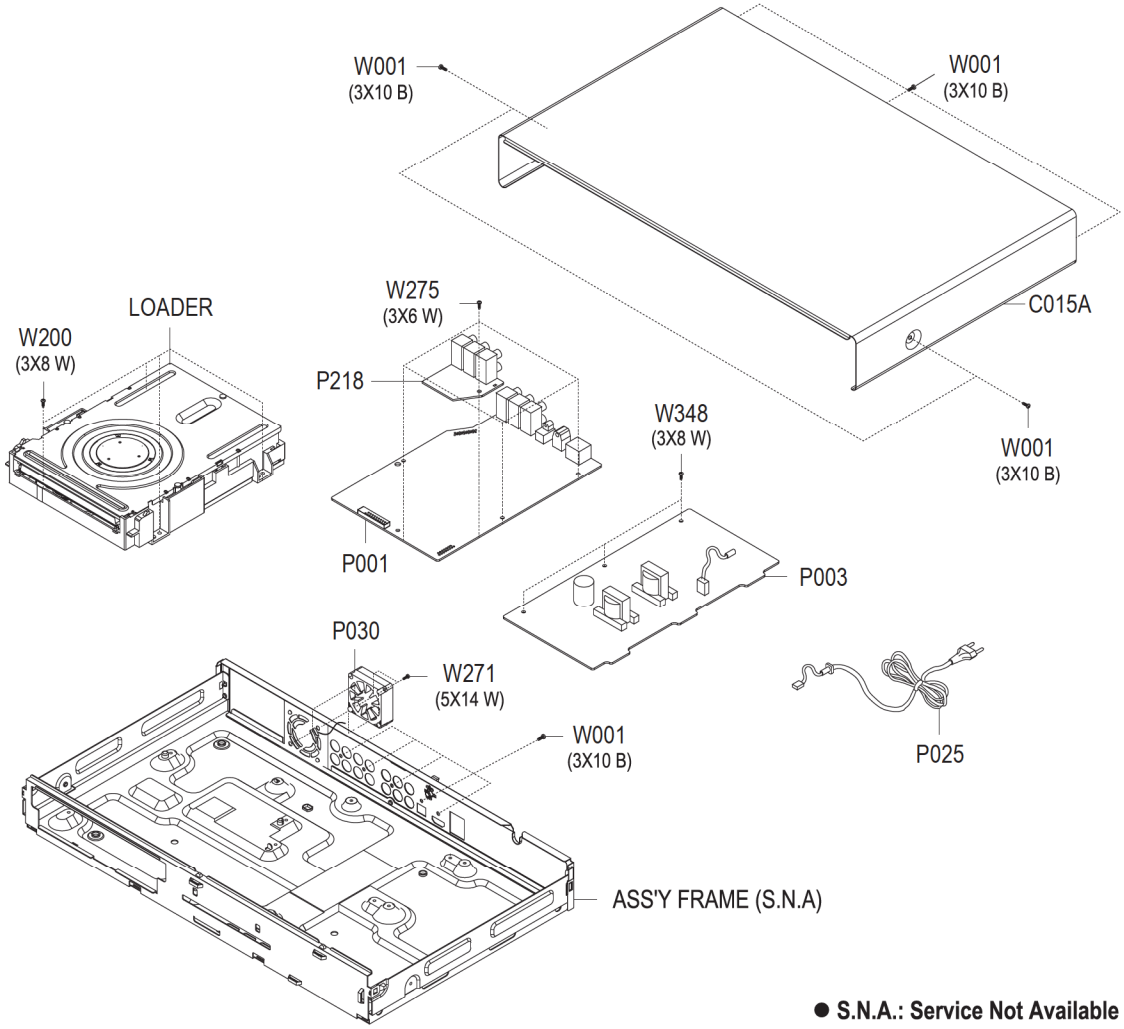
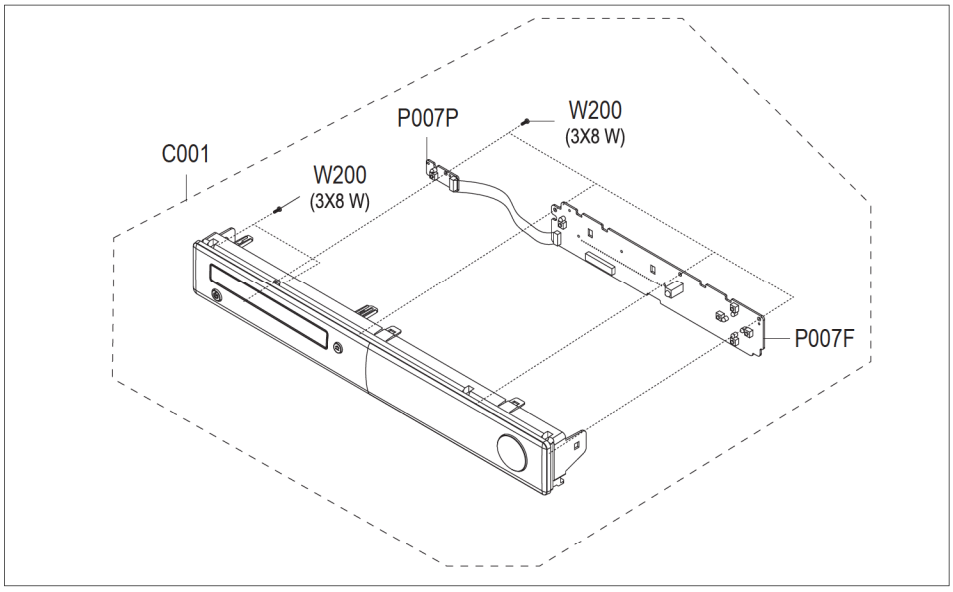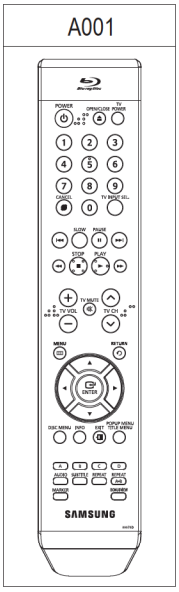
● S.N.A.: Service Not Available