CABINET PARTS

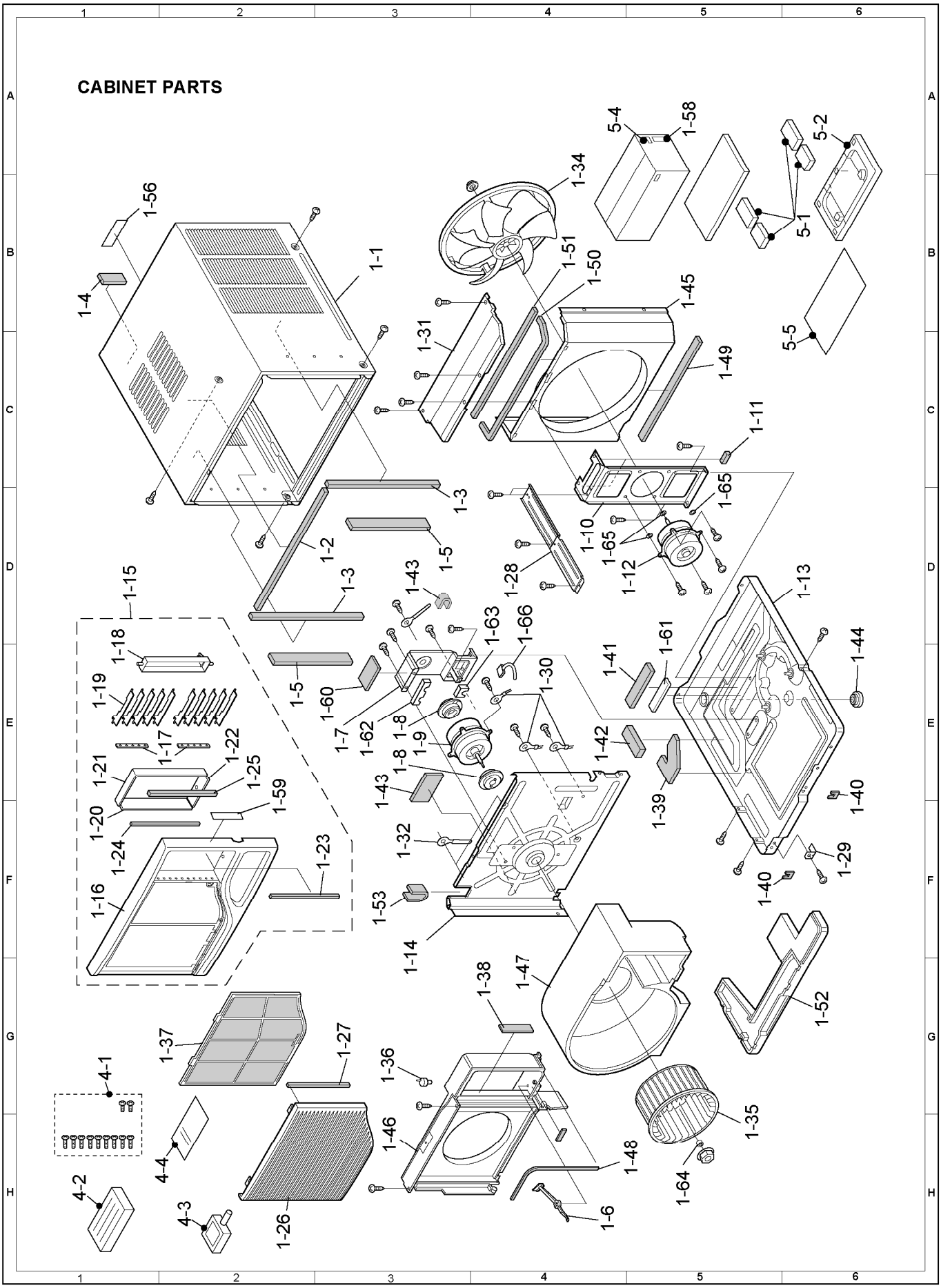

CYCLE PARTS

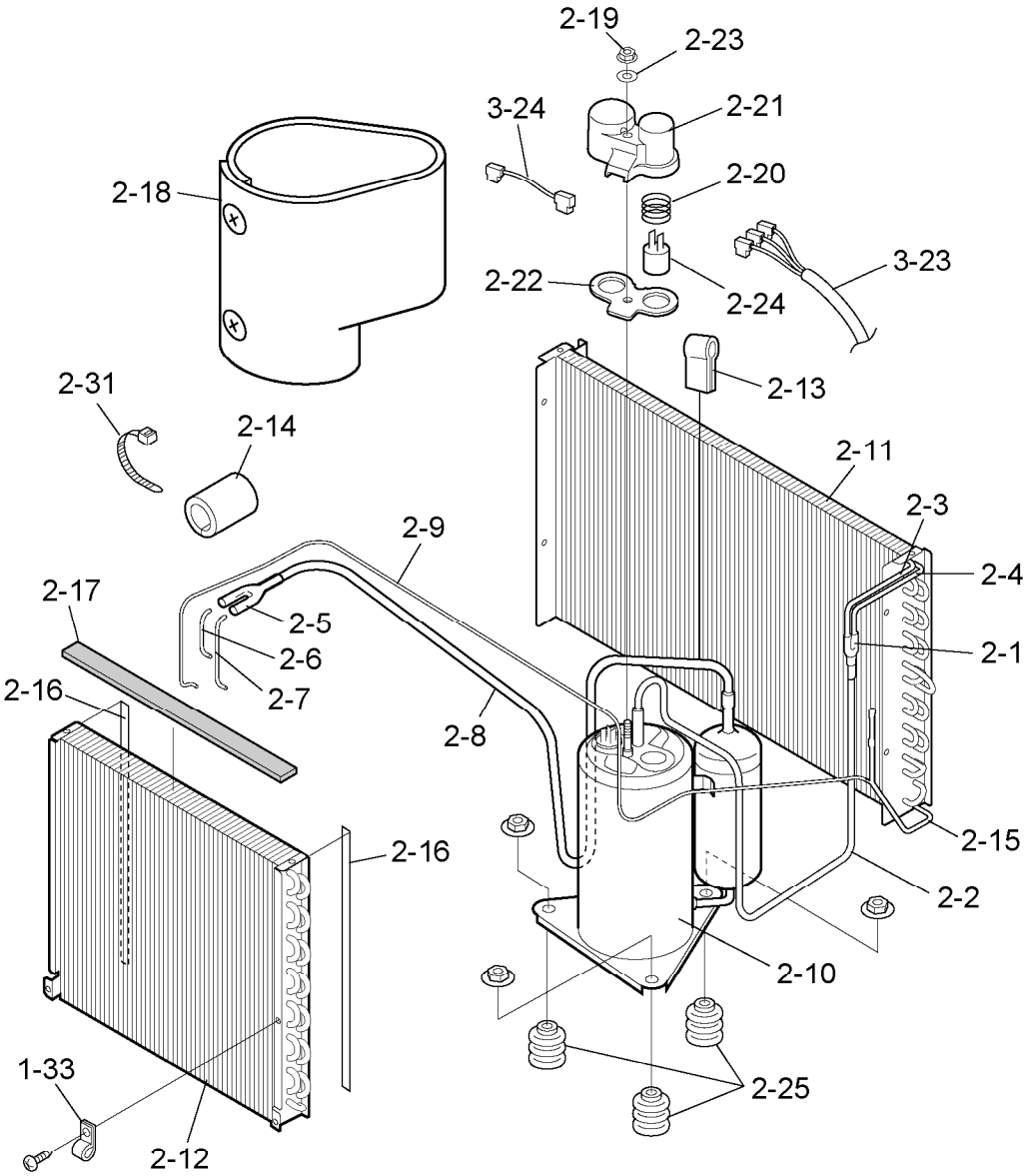
2-19
2-23
3-24
2-21
2-18
2-20
3-23
2-22
2-24
2-13
2-31
2-14
2-11
2-3
2-9
2-4
2-17
2-5
2-1
2-6
2-7
2-16
2-8
2-15
2-16
2-2
2-10
1-33
2-25
2-12

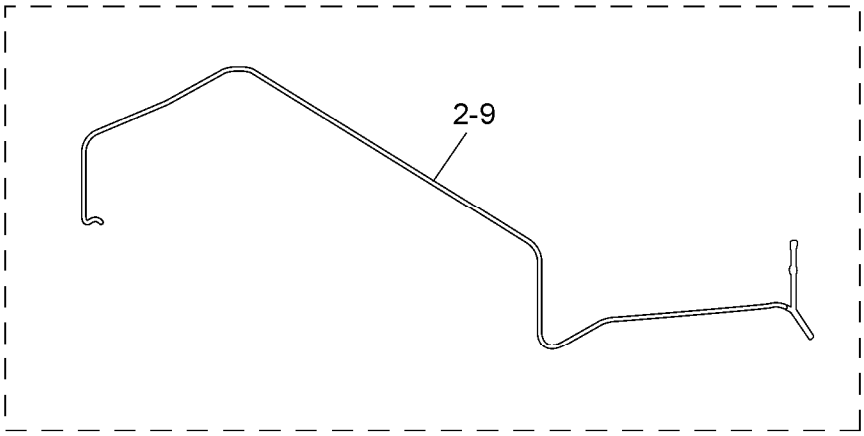
2-9
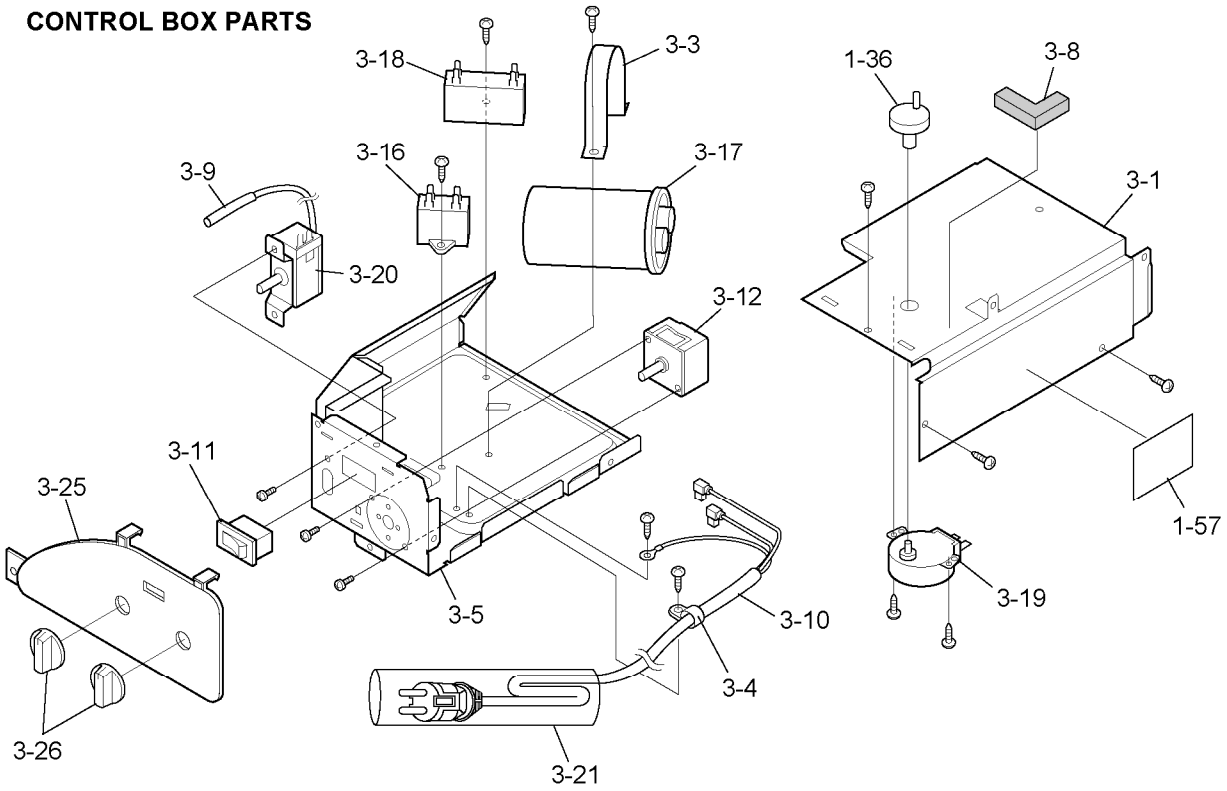
CONTROL BOX PARTS