SHARP® SERVICE MANUAL

S71103R64EHW

MICROWAVE OVEN AND GRILL

MODEL R-64ST

In interests of user-safety the oven should be restored to its original condition and only parts identical to those specified should be used.

TABLE OF CONTENTS

SHARP CORPORATION

CAUTION

CAUTION
MICROWAVE RADIATION

Personnel should not be exposed to the mircowave energy which may radiate from the magnetron or other microwave generating devices if it is improperly used or connected. All input and output microwave connections, waveguides, flanges and gaskets must be secured. Never operate the device without a microwave energy absorbing load attached.
Never look into an open waveguide or antenna while the device is energised.

VARNING
MIKROVAGSSTRALING

Personal får inte utsättas för mikrovågsenergi som kan utstrala från magnetronen eller andre mikrovågsalstrande anordningar om dessa är felanslutna eller används på fel sätt. Alla in-och utgångsanslutningar för mikrovågor, vagledare, flänsar och packningar måste vara fast anslutna. Mikrovågsgeneratorn får inte arbeta utan att absorberande belastning är ansluten. Titta aldrig in i en öppen vågledare eller antenn när mikrovågsgeneratorn är påkopplad eller laddad.

VAROITUS
MIKROAALTOSATEILYA

Käyttäjä ei saa joutua alttiiksi mikroaaltoenergialle, jota voi säteillä magnetronista tai muusta mikroaaltoja kehittävästä laitteesta, jos sitä käytetään väärin tai jos se kytketään väärin. Kaikkien mikroaaltoliitäntöjen sekä syöttö-että ulostulopuolella, aaltoputkien laippojen ja tiivisteiden tulee olla varmistettuja.
Mikroaaltouunia ei koskaan saa käyttää ilman kuormaa jossa mikroaaltoenergiaa kuluu. Avoimeen aaltoputkeen tai antenniin ei koskaan saa katsoa virran ollessa kytkettynä.

ADVARSEL
MIKRØBOLGESTRÅLING

Personell må ikke utsettes for mikrobølge-energi som kan utstråles fra magnetronen eller andre mikrobølge-generende deler dersom apparatet feilbetjenes eller blir feiltikoplet. Alle inn-og uttilkoplinger i forbindelse med mikrobølge-strålingen, bølgeledere, flenser og tetningsringer/pakninger må festes ordentlig.
Aldri bruk apparatet med mindre en mikrobålge-absorberende last er plassert i ovnsrommet. Aldri se direkte inn i en åpen bølgeleder eller antenne imens apparatet er strømførende.

ADVARSEL
MIKRØBOLGEBESTRÅLING

Man bør ikke udsætte sig for mikrobølgebestråling fra magnetronen eller andre mikrobølgefrembringende anordninger, hvilket kan ske hvis apparatet er forkert tilsluttet eller bruges forkert. Alle mikrobølgeindgange og-udgange, bølgeledere, flanger og tætningsstrimler må være forsvarligt udført.
Anvend aldrig ovnen uden en mikrobølgeabsorberende anordning. Se aldrig ind i en åben bølgeleder eller antenne, mens ovnen er i brug.

SERVICE MANUAL

SHARP

GRILL AND MICROWAVE OVEN

R-64ST

GENERAL IMPORTANT INFORMATION

This Manual has been prepared to provide Sharp Corp. Service engineers with Operation and Service Information.
It is recommended that service engineers carefully study the entire text of this manual, so they will be qualified to render satisfactory customer service.

CAUTION
MICROWAVE RADIATION
DO NOT BECOME EXPOSED TO RADIATION FROM THE MICROWAVE GENERATOR OR OTHER PARTS CONDUCTING MICROWAVE ENERGY.

WARNING

Note:	The parts marked "*" are used in voltage more than 250V. (Parts List)
Anm:	Delar märket med "*" har en spänning överstigande 250V.
Huom:	Huolto-ohjeeseen merkitty "tähdella" osat joissa jännite on yli 250 V.
Bemerk:	Deler som er merket "asterisk" er utsatt for spenninger over 250V til jord.
Bemærk:	"Dele mærket med stjerne benyttes med højere spænding end 250 volt.

WARNING

Never operate the oven until the following points are ensured.
(A) The door is tightly closed.
(B) The door latches and hinges are not defective.
(C) The door is not deformed or warped.
(D) There is not any other visible damage with the oven.

Servicing and repair work must be carried out only by trained service engineers.

Removal of the outer wrap gives access to potential above
250 V.

All the parts marked "Δ" on the parts list may cause undue microwave exposure, by themselves, or when they are damaged, loosened or removed.

SHARP CORPORATION

OSAKA, JAPAN

SERVICING

WARNING TO SERVICE PERSONNEL

(GB) Microwave ovens contain circuitry capable of producing very high voltage and current.
Contact with the following parts will result in electrocution
High voltage capacitor, High Voltage transformer, Magnetron, High voltage rectifier assembly, High voltage wires.

REMEMBER TO CHECK 3D

1) Disconnect the supply.
2) Door opened, and wedged open.
3) Discharge high voltage capacitor.

WARNING AGAINST THE CHARGE OF THE HIGH-VOLTAGE CAPACITOR
The high-voltage capacitor remains charged about 60 seconds after the oven has been switched off. Wait for 60 seconds and then short-circuit the connection of the high-voltage capacitor (that is, of the connecting lead of the high-voltage rectifier) against the chassis with the use of an insulated screwdriver.

Sharp recommend that wherever possible fault-finding is carried out with the supply disconnected. It may in, some cases, be necessary to connect the supply after the outer case has been removed, in this event carry out 3D checks and then disconnect the leads to the primary of the power transformer. Ensure that these leads remain isolated from other components and the oven chassis. (Use insulation tape if necessary.) When the testing is completed carry out 3D checks and reconnect the leads to the primary of the power transformer.

REMEMBER TO CHECK 4R

1) Reconnect all leads removed from components during testing.
2) Replace the outer case (cabinet).
3) Reconnect the supply.
4) Run the oven. Check all functions.

Microwave ovens should not be run empty. To test for the presence of microwave energy within a cavity, place a cup of cold water on the oven turntable, close the door and set the power to HIGH and set the microwave timer for two (2) minutes. When the two minutes has elapsed (timer at zero) carefully check that the water is now hot. If the water remains cold carry out 3D checks and re-examine the connections to the component being tested.

When all service work is completed, and the oven is fully assembled, the microwave power output should be checked and a microwave leakage test carried out.

(NL) Magnetronovens bevatten circuits die een zeer hoge spanning en stroom kunnen voortbrengen. Contact met de volgende onderdelen kan elektrocutie tot gevolg hebben.
Hoogspanningscondensator, hoogspanningstransformator, magnetron, hoogspanningsgelijkrichter, hoogspannings draden.

VERGEET DE VOLGENDE 3 STAPPEN NIET

1) Haal de stekker uit het stopcontact.
2) Open de deur en zorg ervoor dat hij niet dicht kan vallen.
3) Ontlaad de hoogspanningscondensator.

PAS OP VOOR DE ELECTRISCHE LADING VAN DE HOOGSPANNINGSCONDENSATOR
De hoogspanningscondensator blijft nog ongeveer 60 seconden lang opgeladen, nadat de oven is uitgeschakeld. Wacht 60 seconden voordat u de verbinding van de hoogspannings-condensator (m.a.w. de verbindingsdraad van de hoogspanningsgelijkrichter) met een geïsoleerde schroevedraaier kortsluit tegen het chassis.

Sharp beveelt ten sterkste aan dat, voor zover mogelijk, defecten worden opgespoord wanneer de stekker uit het stopcontact is gehaald. Soms is het nodig om de stroomtoevoer weer tot stand te brengen nadat de buitenmantel verwijderd is. Herhaal dan de bovengenoemde 3 stappen en haal de electrische draden uit de primaire zijde van de vermogenstransformator. Zorg ervoor dat deze draden geïsoleerd blijven van andere elementen en van het chassis van de oven. (Gebruik zo nodig isolatieband.) Wanneer de test is uitgevoerd, herhaalt u de bovenstaande 3 stappen en verbindt u de electrische draden weer aan de primaire zijde van de vermogenstransformator.

VERGEET DE VOLGENDE 4 STAPPEN NIET

1) Sluit de draden weer aan diezijn losgehaald voor de test.
2) Plaats de buitenmantel weer om het toestel heen (kabinet).
3) Stop de stekker weer in het stopcontact.
4) Zet de oven aan. Controleer alle functies.

Magnetronovens mogen niet leeg aangezet worden. Om te controleren of er microgolf-energie binnen de oven wordt geproduceerd, plaatst u een mok met koud water op de draaitafel van de oven, sluit de deur, zet de oven op HIGH en stelt de klok van de magnetron in op twee (2) minuten. Wanneer de twee minuten voorbij zijn (klok staat op nul), controleert u voorzichtig of het water heet is. Indien het water nog steeds koud is, herhaalt u de allereerste drie stappen en controleer nogmaals de aansluitingen naar de geteste onderdelen.

Wanneer alle reparaties zijn uitgevoerd en de oven weer in elkaar is gezet, moet de het magnetronvermogen worden gecontroleerd en moet worden gecontroleerd of er geen microgolflekkage is.

SERVICING

(E) Los hornos de microonda contienen el trazado de circuito capaz de producir muy de alto voltaje y actual El contacto con las piezas siguientes dará lugar a electrocutio. Para evitar elriesgo de electrocución, absténgase de tocar los siguientes componentes:Condensador de alto voltaje, tranformer de alto voltaje, magnetrón, ensamblaje de rectificador de alto voltaje, alambres de alto voltaje.

RECUERDE LA COMPROBACION 3D

1) Desconecte la alimentación.
2) Deje la puerta abierta y calzada.
3) Descargue el condensador de alto voltaje.

ADVERTENCIA SOBRE LA CARGA DEL CONDENSADOR DE ALTO VOLTAJE
El condensador de alto voltaje permanece cargado unos 60 segundos después de haber apagado el horno. Espere 60 segundos y luego ponga en cortocircuito la conexión del condensador de alto voltaje (esto es, del conductor de conexión del rectificador de alto voltaje) al chasis con un destornillador de mango aislado.

Se recomienda encarecidamente que siempre que sea posible la localización de fallos se realice con la alimentación desconectada. Puede ser que en algunos casos sea necesario conectar la alimentación después de haber retirado la carcasa exterior. En este caso, realice las comprobaciones 3D y luego desconecte los conductores del primario del transformador de alimentación. Asegúrese de que estos conductores permanezcan aislados de otros componentes y del chasis del horno. (Use cinta aislante si es necesario). Cuando termine la prueba efectúe las comprobaciones 3D y reconecte los conductores al primario del transformador de alimentación.

RECUERDE LA COMPROBACION 4C

1) Conecte todos los componentes desconectados de los componentes durante la prueba.
2) Coloque la carcasa exterior (cabina).
3) Conecte la alimentación.
4) Compruebe todas sus funciones despues de poner en marcha el horno.

Los hornos de microondas no deben funcionar vacíos. Para comprobar la presencia de energía de microondas dentro de una cavidad, coloque una taza de agua fría en el plato giratorio del horno, cierre la puerta y ponga la potencia en HIGH (alta) y coloque el temporizador en dos (2) minutos. Cuando transcurran los dos minutos (temporizador a cero) compruebe cuidadosamente que el agua se ha calentado. Si el agua permaneciese fría, efectúe las comprobaciones 3D y vuelva a examinar las conexiones de los componentes que han sido probados.

Cuando haya terminado la intervención en el equipo y el horno haya sido ensamblado de nuevo completamente, deberá comprobar la potencia de salida de microondas y realizar una prueba de fugas de microondas.

(SV) Mikrovågsugnar ugnarna innehålla kretskippet duglig om producerande mycket hög spänningen och gångbar. Konktakten med det följande delen vill resultera inne dödsfall:
Hög spänningen kondensator, hög spänningen transformator, magnetron, hög spänningen likriktare, hög spänningen tråden.

KOM IHÅG ATT KONTROLLERA 3 STEG

1) Koppla från strömkällan.
2) Öppna dörren på glänt.
3) Ladda ur högspänningskondensatorn.

VARNING FÖR LADDNINGEN I HÖGSPÄNNINGSKONDENSATORN
Högspänningskondensatorn är laddad i 60 sekunder efter det att ugnen stängts av. Vänta 60 sekunder och korislut sedan kondensatoms anslutning (dvs anslutningen till högspänningslikriktaren) till chassiet med hjälp av en isolerad skruvmejsel.

Sharp rekommenderar att felsökning sker med strömmen fränkopplad. Ibland kan det var nödvändigt att koppla på strömmen efter det att höljet avlägsnats, utför da 3 Steg kontrollen och koppla sedan från ledarna till transformatorns primärsida. Se till att ledarna är isolerade från andra komponenter och chassiet. (Använd isoleringsband om det behövs). När Du testat färdigt utför Du 3 Steg kontrollen och ansluter ledningarna till transformatorns primärsida igen.

KOM IHÅG ATT KONTROLLERA 4 STEG

1) Anslut alla ledningar som använts vid testning
2) Sätt tillbaka ytterhöljet.
3) Anslut strömkällan på nytt.
4) Sätt på ugnen. Kontrollera alla funktioner.

Mikrovågsugnar får inte användas tomma. Kontrollera mikrovågsstrålningen i olika delar av ugnen genom att placera en kopp med kallt vatten på ugnens tallrik, stäng dörren, ställ in HIGH och ställ in 2 minuter på timern. När två minuter har gått (timem visar 0) kontrollerar du om vattnet är varmt. Om vattnet fortfarande är kallt utför Du 3 steg kontroller och kontrollerar anslutningarna till varje enskild komponent på nytt.

När all service är klar och ugnen ihopskruvad skall ugnens uteffekt och eventuellt mikrovågsläckage kontrolleras.

SERVICING

I

I forni a microonde contengono i circuiti capaci di produrre molto ad alta tensione e corrente Il contatto con le seguenti parti provocherà electrocution.

Condensatore ad alta tensione, tranformer ad alta tensione, magnetron, complessivo di raddrizzatore ad alta tensione, legare ad alta tensione.

TRE OPERAZIONI IMPORTANTI PER INCOMINCIARE

1) Scollegare l'alimentazione elettrica.
2) Verificare che la porta sia bloccata in posizione aperta.
3) Scaricare il condensatore ad alta tensione.

ATTENZIONE AL CONDENSATORE AD ALTA TENSIONE: PUO ESSERE CARICO
Il condensatore ad alta tensione rimane carico per circa 60 secondi dopo lo spegnimento del forno. Occorre quindi spettare 60 secondi prima di cortocircuitare, utilizzando un cacciavite con impugnatura isolata, il collegamento del condensatore ad alta tensione (cioè del conduttore di collegamento del raddrizzatore ad alta tensione) sul telaio del forno.

Sharp raccomanda, nei limiti del possibile, che la ricerca dei guasti avvenga in assenza di alimentazione elettrica. In alcuni casi tuttavia, può essere necessario alimentare l'apparecchio dopo aver rimosso la scatola esterna. In questo caso eseguire i tre controlli sopra citati e quindi scollegare i connettori dal primario del trasformatore. Assicurarsi che tali connettori non vengano a contatto con altri componenti, ne con il telaio del forno (fare uso, se necessario, di nastro isolante). Al termine dell'intervento, eseguire nuovamente i tre controlli e ricollegare i conduttori al primario del trasformatore.

QUATTRO VERIFICHE IMPORTANTI DA NON DIMENTICARE

1) Ricollegare tutti i conduttori staccati dai vari componenti durante l'intervento.
2) Rimontare la scatola esterna.
3) Ripristinare l'alimentazione elettrica.
4) Rimettere in funzione il forno. Controllare tutte le funzioni.

I forni a microonde non devono mai funzionare a vuoto. Per verificare la presenza di energia da microonde all'interno di una cavitá, mettere una tazza di acqua fredda sul piatto rotante del forno, chiudere la porta, regolare la potenza su HIGH ed impostate il temporizzatore su due (2) minuti. Trascorsi i due minuti (temporizzatore a zero), controllare accuratamente che ora l'acqua sia calda. Se l'acqua è rimasta fredda, eseguire i tre controlli iniziali e verificare nuovamente i collegamenti del componente in questione.

Dopo aver portato a termine le operazioni di manutenzione e rimontato il forno, è necessario controllare la potenza delle microonde emesse ed eseguire un test per verificare che non vi sia alcuna dispersione.

When troubleshooting the microwave oven, it is helpful to follow the Sequence of Operation in performing the checks. Many of the possible causes of trouble will require that a specific test be performed. These tests are given a procedure letter which will be found in the "Test Procedure" section.

IMPORTANT: If the oven becomes inoperative because of a blown fuse F8A in the monitored latch switch - monitor switch circuit, check the monitored latch switch and monitor switch before replacing the fuse F8A.

As part of our policy of continuous improvement, we reserve the right to alter design and specifications without notice

CAUTION/WARNING

CAUTION
MICROWAVE RADIATION

Service engineers should not be exposed to the microwave energy which may radiate from the magnetron or other microwave generating devices if it is improperly used or connected. All input and output microwave connections, waveguides, flanges and gaskets must be secured. Never operate the device without a microwave energy absorbing load attached. Never look into an open waveguide or antenna while the device is energized.

WARNING

Servicing and repair work must be carried out only by trained service engineers.

All the parts marked "*" on parts list are used at voltages more than 250V.

Removal of the outer wrap gives access to potentials above 250V.

All the parts marked "Δ" on parts list may cause undue microwave exposure, by themselves, or when they are damaged, loosened or removed.

WARNING

THIS APPLIANCE MUST BE EARTHED. THE WIRES IN THIS MAINS LEAD ARE COLOURED IN ACCORDANCE WITH THE FOLLOWING CODE:
GREEN-AND-YELLOW : EARTH BLUE : NEUTRAL BROWN : LIVE

PRODUCT DESCRIPTION

SPECIFICATION

ITEM	DESCRIPTION
Power Requirements	230 Volts 50 Hertz Single phase, 3 wire earthed
Power Consumption	Microwave cooking 1.25 W Approx. 5.8 A Grill Cooking 1050 W Approx. 4.6A Dual Cooking 2.25W Approx. 10.1A
Power Output	800 W nominal of RF microwave energy (measured by method of IEC 60705) Operating fequency 2450 MHz
Grill heating element Power Output (Top Grill)	1000 W (500 W x 2)
Case Dimensions	Width 449 mm Height 282 mm including foot Depth 369mm
Cooking Cavity Dimensions	Width 290 mm Height 194 mm Depth 313 mm
Turntable diameter	272 mm
Control Complement	Jog Touch Control System Microwave Power for Variable Cooking Repetition Rate; HIGH ..... Full power throughout the cooking time MEDIUM HIGH ..... approx. 70% of FULL Power MEDIUM ..... approx. 50% of FULL Power MEDIUM LOW ..... approx. 30% of FULL Power LOW ..... approx. 10% of FULL Power EXPRESS DEFROST Button EXPRESS COOK button STOP Button +1 min/START button COOKING MODE button TIMER/WEIGHT/POWER knob
Net Weight	Approx. 14 kg

APPEARANCE VIEW

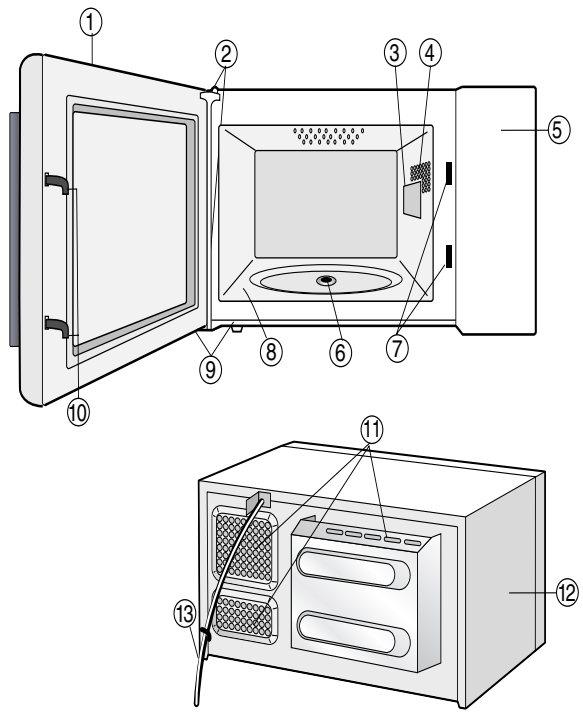

OVEN

1. Door
2. Door hinges
3. Waveguide cover
4. Oven lamp
5. Control panel
6. Rubber seal
7. Door latch openings
8. Oven cavity
9. Door seals and sealing surfaces
10. Safety door latches
11. Ventilation openings
12. Outer cabinet
13. Power supply cord

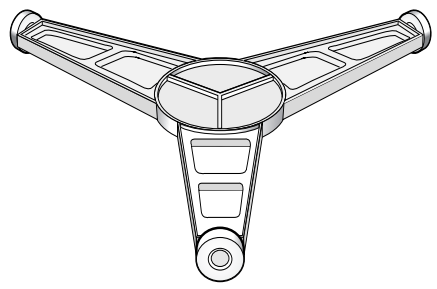

1. Place the roller stay on the floor of the oven cavity, engaging shaft into turntable motor shaft.
2. Then place the turntable on roller stay.

CONTROL PANEL

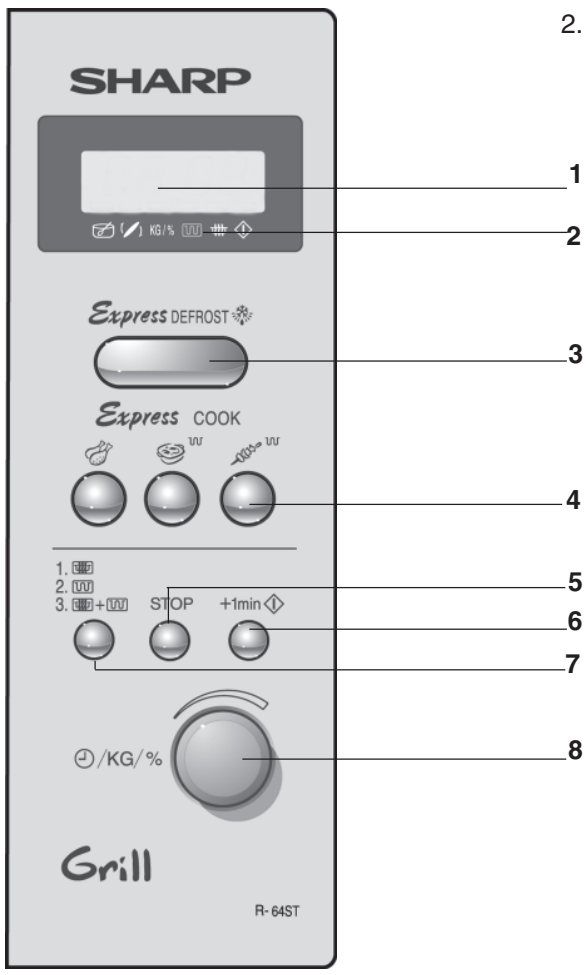

1 Digital Display
2 Symbols and Indicators
3 EXPRESS DEFROST button
4 EXPRESS COOK button
5 STOP button
6 +1 min/START button
7 COOKING MODE button
8 TIMER/WEIGHT/POWER knob

OPERATION SEQUENCE

OFF CONDITION

Closing the door activates all door interlock switches (Monitored latch switch, and stop switch.)

IMPORTANT:
When the oven door is closed, the contacts COM-NC of the monitor switch must be open. When the microwave oven is plugged in a wall outlet (230V / 50Hz), the line voltage is supplied to the point A1 + A3 in the control unit.

Figure O-1 on page 32

1. The display flashes "88:88"
2. To set any programmes or set the clock, you must first touch the STOP pad.
3. " : " appears in display.

NOTE: When the oven door is opened, the oven lamp comes on at this time.

MICROWAVE COOKING CONDITION

HIGH COOKING

Enter a desired cooking time by turning the Timer knob and start the oven by touching START +1min button.

Function sequence Figure O-2 on page 32

CONNECTED COMPONENTS	RELAY
Oven lamp, Fan motor, Turntable motor	RY1
High voltage transformer	RY3

1. 230 volts A.C. is supplied to the primary winding of the high voltage transformer. The voltage is converted to about 3.3 volts A.C. output on the filament winding and high voltage of approximately 2000 volts A.C. on the secondary winding.
2. The filament winding voltage (3.3 volts) heats the magnetron filament and the high voltage (2000 volts) is sent to the voltage doubling circuit, where it is doubled to negative voltage of approximately 4000 volts D.C..
3. The 2450 MHz microwave energy produced in the magnetron generates a wave length of 12.24 cm. This energy is channelled through the waveguide (transport channel) into the oven cavity, where the food is placed to be cooked.
4. When the cooking time is up, a signal tone is heard and the relays RY1 + RY3 go back to their home position. The circuits to the oven lamp, high voltage transformer, fan motor and turntable motor are cut off.
5. When the oven door is opened during a cooking cycle, the switches come to the following condition.

Switch	Contact	Condition	
		During Cooking	Oven Door Open (No cooking)
Monitored Latch Switch	COM-NO	Closed	Opened
Monitor Switch	COM-NC	Opened	Closed
Stop Switch	COM-NO	Closed	Opened

The circuit to the high voltage transformer, fan motor and turntable motor are cut off when the monitored latch switch, latch switch and stop switch are made open. The oven lamp remains on even if the oven door is opened after the cooking cycle has been interrupted, because the relay RY1 stays closed. Shown in the display is remaining time.

6. MONITOR SWITCH CIRCUIT
   The monitor switch is mechanically controlled by the oven door, and monitors the operation of the monitored latch switch.

6-1. When the oven door is opened during or after the cycle of a cooking program, the monitored latch switch must open its contacts (COM-NO) first. After that the contacts (COM-NC) of the monitor switch can be closed and the contacts of stop switch can be opened.

6-2. When the oven door is closed, the contacts (COM-NC) of the monitor switch must be opened and the contacts (COM-NO) of stop switch must be closed first. After that the contacts of the monitored latch switch are closed.

6-3. When the oven door is opened and the contacts of the monitored latch switch remain closed, the fuse F8A will blow, because the monitor switch are closed and a short circuit is created.

MEDIUM HIGH, MEDIUM, MEDIUM LOW, LOW COOKING

When the microwave oven is preset for variable cooking power, the 230 volts is supplied to the high voltage transformer intermittently within a 32-second time base through the relay contact which is coupled with the current-limiting relay RY3. The following levels of microwave power are given.

SETTING

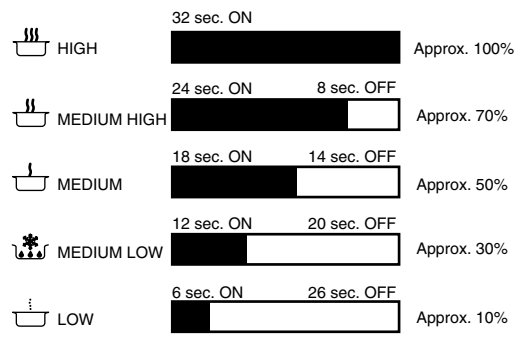

Note: The On/Off time ratio does not exactly correspond to the percentage of microwave power, because approx. 3 seconds are needed for heating up the magnetron filament.

GRILL COOKING CONDITION (Figure O-3)

In this condition the food is cooked by grill heating element energy. Program desired cooking time and grill mode by turning the timer knob and touching mode select button twice (x 2). When the START +1min button is touched, the following operations occur:

1. The numbers of the digital readout start the count down to zero.
2. The oven lamp, cooling fan motor and turntable motor are energized.
3. The relay RY2 is energized and the grill heating elements are energized.
4. Now, the food is grilled by the grill heating elements.

OPERATION SEQUENCE

EXPRESS COOK programme

Keep on touching the COOK/DEFROST button until the desired cooking programme appears in the display.
Enter weight or quantity of food by rotating the TIMER/WEIGHT/POWER knob until the desired weight/quantity is displayed.
Once the oven starts, it will cook according to the computer programmed sequence.

COMBI GRILL COOKING CONDITION

Program desired cooking time and select COMBI GRILL mode and programme microwave power level. When the START pad is touched, the following operations occur:

1. The numbers of the digital read-out start the count down to zero.
2. The shut-off relay (RY1) energised, turning on the oven lamp, turntable motor and cooling fan motor.
3. The power supply voltage is added to the grill heater and power transformer alternately.
4. The grill heater operates through the heater relay (RY1) contacts and the high voltage transformer operates through the cook relay (RY3) contacts.
5. These are operated by the CPU unit to supply alternately within a 32 second time base, grill heat and microwave energy.

NOTE: The ON and OFF time ratio does not correspond with the percentage of microwave power, because approx. 2 seconds are needed for heating of the magnetron filament.

FUNCTION OF IMPORTANT COMPONENTS

DOOR OPEN MECHANISM

The door can be opened by pulling the door.

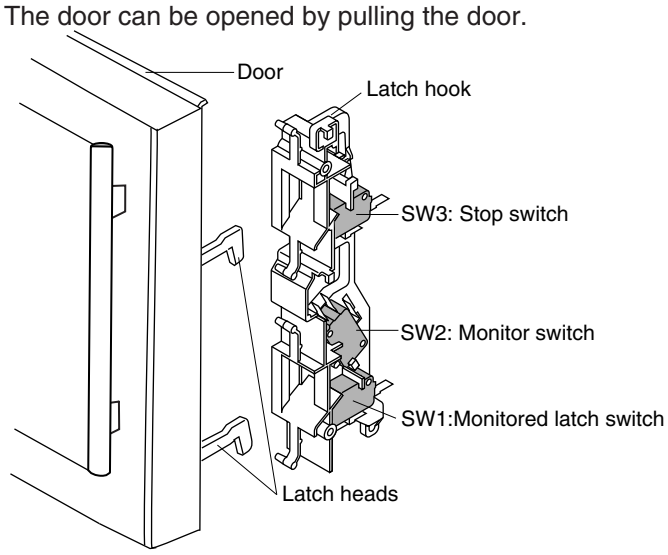

Figure D-1. Door Open Mechanism

MONITORED LATCH SWITCH (SW1) AND STOP SWITCH (SW3)

1. When the oven door is closed, the contacts (COM-NO) must be closed.
2. When the oven door is opened, the contacts (COM-NO) of each switch must be opened.

MONITOR SWITCH (SW2)

1. When the oven door is closed, the contacts (COM-NC) must be opened.
2. When the oven door is opened, the contacts (COM-NC) must be closed.
3. If the oven door is opened and the contacts (COM-NO) of the monitored latch switch (SW1) fail to open, the fuse F1 blows immediately after closing the contacts (COM-NC) of the monitor switch (SW2).

CAUTION: BEFORE REPLACING A BLOWN FUSE F1 TEST MONITORED LATCH SWITCH (SW1) AND MONITOR SWITCH (SW2) FOR PROPER OPERATION. (REFER TO CHAPTER "TEST PROCEDURE").

FUSE F1 250V

1. If the wire harness or electrical components are short-circuited, this fuse blows to prevent an electric shock or fire hazard.
2. The fuse also blows when monitored latch switch remains closed with the oven door open and when the monitor switch contact (COM-NC) closes.
3. The fuse also blows when the H.V. rectifier, H.V. wire harness, H.V. capacitor, magnetron or secondary winding of high voltage transformer is shorted.

THERMAL CUT-OUT 150˚C (OVEN)

The thermal cut-out protects the oven against the over heat during grill cooking or combi grill cooking. If the temperature rises above 150˚C because the fan motor is interrupted, the air inlet duct is blocked or the ventilation openings are obstructed, the thermal cut-out opens and switches off the all electrical parts. The defective thermal cut-out re-makes the contact by cooling down.

GRILL HEATING ELEMENT GH

The grill heating element is provided to brown the food and is located on the top of the oven cavity.

NOISE FILTER

The noise filter assembly prevents radio frequency interference that might flow back in the power circuit.

TURNTABLE MOTOR TTM

The turntable motor drives the roller stay to rotate the turntable.

FAN MOTOR FM

The fan motor drives a blade which draws external cool air. This cool air is directed through the air vanes surrounding the magnetron and cools the magnetron. This air is channelled through the oven cavity to remove steam and vapours given off from the heating foods. It is then exhausted through the exhausting air vents at the oven cavity.

TROUBLESHOOTING GUIDE

CONDITION	TEST PROCEDURE / POSSIBLE CAUSE AND DEFECTIVE PARTS / PROBLEM	A MAGNETRON	B HIGH VOLTAGE TRANSFORMER	C H.V. RECTIFIER	H.V. HARNESS	D HIGH VOLTAGE CAPACITOR	E MONITORED LATCH SWITCH	E STOP SWITCH	E MONITOR SWITCH	F HVT THERMAL CUT-OUT 150˚C	F THERMAL CUT-OUT 150˚C (OVEN)	G TURNTABLE MOTOR	G FAN MOTOR	H NOISE FILTER	I FUSE F1 (F8A)	J GRILL HEATING ELEMENT	POWER SUPPLY CORD	SHORTED WIRE HARNESS	FUSE F2 (20A)
OFF CONDITION	Fuse F1 blows when the door is opened.						○		○										
	Home fuse blows when power cord is plugged into wall outlet.																○	○	
	"88:88" does not appear in display when power cord is plugged into wall outlet.									○	○			○	○		○		○
	Display does not operate properly when STOP button is touched.							○											
	Oven lamp does not light when door is opened. (Display operates.)							○										○	
COOKING CONDITION (COMMON MODE)	Oven does not start when the START button is touched. (Display operates.)							○											
	Fan motor does not operate. (Oven lamp lights.)												○						
	Turntable motor does not operate. (Oven lamp lights.)											○							
	Oven or any electrical parts does not stop when cooking time is 0 or STOP button is touched.							○											
	Display operates properly but all electrical parts do not operate.																		○
	Oven goes into cook cycle but shuts down before end of cooking cycle.									○	○				○		○	○	○
MICROWAVE COOKING CONDITION	Oven seems to be operating but little or no heat is produced in oven load. (Microwave power control is set at HIGH)	○	○	○	○	○	○												○
	Oven does not seem to be operating properly during variable cooking condition. (Oven operates properly at HIGH)																		
GRILL COOKING CONDITION	Grill heating element does not heat. (Oven seems to be operating.)						○									○			
COMBI-GRILL COOKING CONDITION	Fuse F8A blows	○	○	○	○	○	○		○						○			○	

TROUBLESHOOTING GUIDE

OPENED WIRE HARNESS		○	○	○	○	○	○	○	○		○		○		○
OVEN LAMP											○				
KEY UNIT										○		○			
TC TRANSFORMER													○		
TOUCH CONTROL PANEL		○	○	○	○	○	○	○	○	○	○	○	○		○
BLOCKED VENTILATION OPENINGS						○									
WRONG OPERATION															
MIS-ADJUSTMENT OF SWITCHES		○	○		○				○	○	○		○		○
HOME FUSE OR BREAKER															
NO POWER AT WALL OUTLET													○		
BLOCKED COOLING FAN						○				○					
RELAY (RY1, 2, 3,)	M	○	○	○	○			○	○	○	○	○			
FOIL PATTERN	N												○		

PROCEDURE LETTER	COMPONENT TEST

A **MAGNETRON TEST**

NEVER TOUCH ANY PART IN THE CIRCUIT WITH YOUR HAND OR AN INSULATED TOOL WHILE THE OVEN IS IN OPERATION.

CARRY OUT 3D CHECKS.

Isolate the magnetron from high voltage circuit by removing all leads connected to filament terminal.

To test for an open circuit filament use an ohmmeter to make a continuity test between the magnetron filament terminals, the meter should show a reading of less than 1 ohm.

To test for short filament to anode condition, connect ohmmeter between one of the filament terminals and the case of the magnetron (ground). This test should be indicated an infinite resistance. If a low or zero resistance reading is obtained then the magnetron should be replaced.

MICROWAVE OUTPUT POWER (IEC-60705-1988)

The following test procedure should be carried out with the microwave oven in a fully assembled condition (outer case fitted). Microwave output power from the magnetron can be measured by way of IEC 705, i.e. it is measured by how much power the water load can absorb. To measure the microwave output power in the microwave oven, the relation of calorie and watt is used. When P(W) heating works for t (second), approximately P x t/4.187 calorie is generated. On the other hand, if the temperature of the water with V(ml) rises ΔT (°C) during this microwave heating period, the calorie of the water is V x ΔT.

The formula is as follows;

$P \times t / 4.187 = V \times \Delta T$ $P (W) = 4.187 \times V \times \Delta T / t$

Our condition for water load is as follows:

Room temperature ..... around 20°C Power supply Voltage ..... Rated voltage
Water load ..... 1000 g Initial temperature ..... 10±2°C
Heating time ..... 52 + 3 = 55 sec.
$P = 80 \times \Delta T$

Measuring condition:

1. Container
   The water container must be a cylindrical borosilicate glass vessel having a maximum material thickness of 3 mm and an outside diameter of approximately 190 mm.
2. Temperature of the oven and vessel
   The oven and the empty vessel are at ambient temperature prior to the start the test.
3. Temperature of the water
   The initial temperature of the water is (10±2)°C.
4. Select the initial and final water temperature so that the maximum difference between the final water temperature and the ambient temperature is 5K.
5. Select stirring devices and measuring instruments in order to minimize addition or removal of heat.
6. The graduation of the thermometer must be scaled by 0.1°C at minimum and be an accurate thermometer.
7. The water load must be (1000±5) g.
8. "t" is measured while the microwave generator is operating at full power. Magnetron filament heat-up time is not included.

NOTE: The operation time of the microwave oven is "t + 3" sec. (3 sec. is magnetron filament heat-up time.) Therefore total heating time = 55 sec.

PROCEDURE LETTER	COMPONENT TEST

Measuring method:
1. Measure the initial temperature of the water before the water is added to the vessel. (Example: The initial temperature T1 = 11°C)
2. Add the 1 litre water to the vessel.
3. Place the load on the centre of the shelf.
4. Operate the microwave oven at HIGH for the temperature of the water rises by a value Δ T of (10 ± 2) K.
5. Stir the water to equalize temperature throughout the vessel.
6. Measure the final water temperature. (Example: The final temperature T2 = 21°C)
7. Calculate the microwave power output P in watts from above formula.

Initial temperature ..... T1 = 11°C
Temperature after (52 + 3) = 55 sec ..... T2 = 21°C
Temperature difference Cold-Warm ..... ΔT1 = 10C
Measured output power
The equation is "P = 80 x ΔT" ..... P = 80 x 10°C = 800 Watts

JUDGMENT: The measured output power should be at least ± 15 % of the rated output power.

CAUTION: 1°C CORRESPONDS TO 75 WATTS. REPEAT MEASUREMENT IF THE POWER IS INSUFFICIENT.

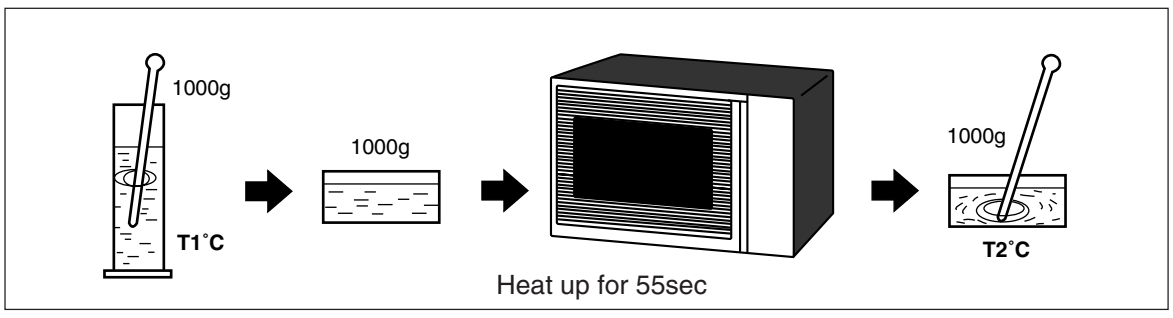

B **HIGH VOLTAGE TRANSFORMER TEST**

WARNING: High voltage and large currents are present at the secondary winding and filament winding of the high voltage transformer. It is very dangerous to work near this part when the oven is on. NEVER make any voltage measurements of the high-voltage circuits, including the magnetron filament.

CARRY OUT 3D CHECKS.
Disconnect the leads to the primary winding of the high voltage transformer. Disconnect the filament and secondary winding connections from the rest of the HV circuitry. Using an ohmmeter, set on a low range, it is possible to check the continuity of all three windings. The following readings should be obtained:-

a. Primary winding	approximately 2.22 ohms
b. Secondary winding	approximately 142 ohms
c. Filament winding	less than 1 ohm

If the readings obtained are not stated as above, then the high voltage transformer is probably faulty and should be replaced.

CARRY OUT 4R CHECKS.

PROCEDURE LETTER	COMPONENT TEST

C **HIGH VOLTAGE RECTIFIER TEST**

CARRY OUT 3D CHECKS.
Isolate the high voltage rectifier from the HV circuit. The high voltage rectifier can be tested using an ohmmeter set to its highest range. Connect the ohmmeter across the terminal B+C of the high voltage rectifier and note the reading obtained. Reverse the meter leads and note this second reading.
The normal resistance is infinite in one direction and more than 100 kΩ in the other direction.
CARRY OUT 4R CHECKS.

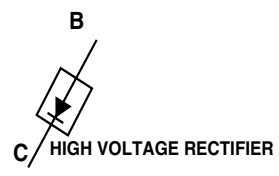

D **HIGH VOLTAGE CAPACITOR TEST**

CARRY OUT 3D CHECKS
A. Isolate the high voltage capacitor from the circuit.
B. Continuity check must be carried out with measuring instrument which is set to the highest resistance range.
C. A normal capacitor shows continuity for a short time (kick) and then a resistance of about 10MΩ after it has been charged.
D. A short-circuited capacitor shows continuity all the time.
E. An open capacitor constantly shows a resistance about 10 MΩ because of its internal 10MΩ resistance.
F. When the internal wire is opened in the high voltage capacitor shows an infinite resistance.
G. The resistance across all the terminals and the chassis must be infinite when the capacitor is normal.
If incorrect reading are obtained, the high voltage capacitor must be replaced.

CARRY OUT 4R CHECKS.

E **SWITCH TEST**

CARRY OUT 3D CHECKS.
Isolate the switch to be tested and using an ohmmeter check between the terminals as described in the following table.

Table: Terminal Connection of Switch

Plunger Operation	COM to NO	COM to NC
Released	O.C.	S.C.
Depressed	S.C.	O.C.

COM; Common terminal,
NO; Normally open terminal
NC; Normally close terminal
S.C.; Short circuit
O.C.; Open circuit

If incorrect readings are obtained, make the necessary switch adjustment or replace the switch.

CARRY OUT 4R CHECKS.

PROCEDURE LETTER	COMPONENT TEST

F **THERMAL CUT-OUT TEST**

CARRY OUT 3D CHECKS

Disconnect the leads from the terminals of the thermal cut-out. Then using an ohmmeter, make a continuity test across the two terminals as described in the below.

Table: Thermal Cut-out Test

Parts Name	Temperature of "ON" condition (closed circuit). (˚C)	Temperature of "OFF" condition (open circuit). (˚C)	Indication of ohmmeter (When room temperature is approx. 20˚C.)
Oven thermostat 150˚C	This is a resettable type.	Above 150˚C	Closed circuit 130˚C
HVT thermostat 150˚C	This is a resettable type	Above 150˚C	Closed circuit 96˚C.

If incorrect readings are obtained, replace the thermal cut-out.
An open circuit thermal cut-out (TX) indicates that the transformer has overheated, this may be due to restricted ventilation, cooling fan failure.
An open circuit thermal cut-out (OVEN) indicates that the oven cavity has overheated, this may be due to no load operation, or burning load has occured.

CARRY OUT 4R CHECKS.

G **MOTOR WINDING TEST**

CARRY OUT 3D CHECKS.

Disconnect the leads from the motor. Using an ohmmeter, check the resistance between the two terminals as described in the table below.

Table: Resistance of Motor

Motors	Resistance
Fan motor	Approximately 373 Ω
Turntable motor	Approximately 15.5 kΩ

If incorrect readings are obtained, replace the motor.

CARRY OUT 4R CHECKS.

H **NOISE FILTER TEST**

CARRY OUT 3D CHECKS.

Disconnect the leads from the terminals of noise filter.
Using an ohmmeter, check between the terminals as described in the following table.

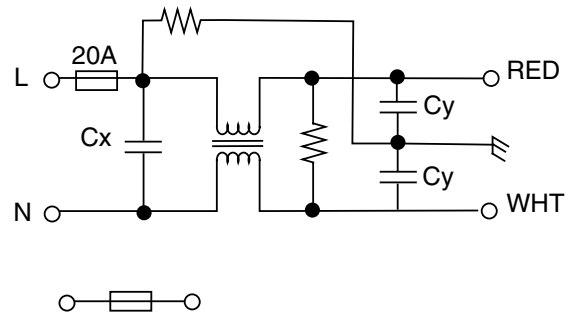

MEASURING POINTS	INDICATION OF OHMMETER
Between N and L	Approx. 680 kΩ
Between terminal N and WHITE	Short circuit
Between terminal L and RED	Short circuit

If incorrect readings are absorbed, replace the noise filter unit.

CARRY OUT 4R CHECKS.

PROCEDURE LETTER	COMPONENT TEST

I **BLOWN FUSE F1**

CARRY OUT 3D CHECKS.

1. If the fuse F1 is blown when the door is opened, check the 1st latch switch and monitor switch.
2. If the fuse F1 is blown by incorrect door switching replace the defective switch(es) and the fuse F1.
3. If the fuse F1 is blown, this may occur due to short or ground in H.V. rectifier, magnetron, high voltage transformer or H.V. wire or a ground in wire harness. Check them and replace the defective parts or repair the wire harness.
4. If the fuse F1 is blown, there could be a shorts or grounds in electrical parts or wire harness. Check them and replace the defective parts or repair the wire harness.

CARRY OUT 4R CHECKS.

CAUTION: Only replace fuse F1 with the correct value replacement.

J **GRILL HEATING ELEMENT TEST**

CARRY OUT 3D CHECKS

Before carrying out the following tests make sure the heating element is cool completely.

1. Resistance of heating element.
   Disconnect the wire leads to the heating element to be tested. Using ohmmeter with low resistance range. Check the resistance across the terminals of the heating element as described in the following table.

Table: Resistance of heating element

Parts name	Resistance
Grill heating element	Approximately 25.6 Ω x 2 = 51.2 Ω

2. Insulation resistance.
   Disconnect the wire leads to the heating element to be tested. Check the insulation resistance between the element terminal and cavity using a 500V - 100MΩ insulation tester. The insulation resistance should be more than 10 MΩ in the cold start.

If the results of above test 1 and/or 2 are out of above specifications, the heating element is probably faulty and should be replaced.

CARRY OUT 4R CHECKS. CARRY OUT 3D CHECKS.

TEST PROCEDURES

PROCEDURE LETTER	COMPONENT TEST
K	**TOUCH CONTROL PANEL ASSEMBLY TEST**

The touch control panel consists of circuits including semiconductors such as LSI, ICs, etc. Therefore, unlike conventional microwave ovens, proper maintenance cannot be performed with only a voltmeter and ohmmeter.
In this service manual, the touch control panel assembly is divided into two units, Control Unit and Switch Unit, and troubleshooting by unit replacement is described according to the symptoms indicated.

1. Switch Unit. Note : Check switch unit lead wire harness connection before replacement.
   The following symptoms indicate a defective switch unit. Replace the switch unit.
   a) When touching the keys, a certain key produces no signal at all.
   b) When touching a key, two figures or more are displayed.
   c) When touching the keys, sometimes a key produces no signal.
2. Control Unit
   The following symptoms indicate a defective control unit. Before replacing the control unit, perform the Switch unit test (Procedure L) to determine if control unit is faulty.

2-1 In connection with keys.
   a) When touching the keys, a certain group of keys do not produce a signal.
   b) When touching the keys, no keys produce a signal.

2-2 In connection with indicators
   a) At a certain digit, all or some dots do not light up.
   b) At a certain digit, brightness is low.
   c) Only one indicator does not light.
   d) The corresponding dots of all digits do not light up; or they continue to light up.
   e) Wrong figure appears.
   f) A certain group of indicators do not light up.
   g) The figure of all digits flicker.

2-3 Other possible problems caused by defective control unit.
   a) Buzzer does not sound or continues to sound.
   b) Clock does not operate properly.
   c) Cooking is not possible.

L	**TACT SWITCH TEST**

1. Disconnect the oven from the power supply.
2. Discharge the high voltage capacitor.
3. Remove the control unit from the control panel.
4. By using an ohmmeter, check the tact switch operation.
5. When the tact switch is not depressed, an ohmmeter should indicate an open circuit. When the tact switch is depressed, an ohmmeter should indicate a short circuit. If improper operation is indicated, the tact switch is probably defective and should be checked.

PROCEDURE LETTER	COMPONENT TEST

M **SWITCH UNIT TEST**

If the display fails to clear when the STOP key is depressed, first verify the lead wire harness is making good contact, verify that the stop switch operates properly; that is the contacts are closed when the door is closed and open when the door is open. If the stop switch is good, disconnect the lead wire harness that connects the switch unit to the main board and make sure the stop switch is closed (either close the door or short the stop switch connector). Use the Switch unit matrix indicated on the switch unit circuit and place a jumper wire between the pins that correspond to the STOP key making momentary contact. If the assembly responds by clearing with a beep the switch unit is faulty and must be replaced. If the assembly does not respond, the main board is faulty and must be replaced. If a specific key does not respond, the above method may be used (after clearing the display) to determine if the display unit or main board is at fault.

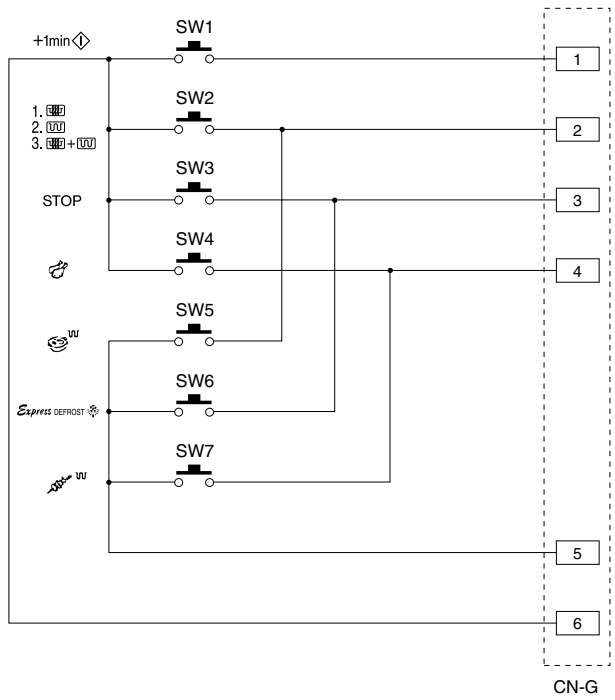

N **RELAY TEST**

Remove the outer case and check voltage between Pin No. 1 and Pin No. 3 of the 3 pin connector (A) on the control unit with an A.C. voltmeter.
The meter should indicate rated voltage, if not check oven circuit.

RY1, RY2 and RY3 Relay Test
These relays are operated by D.C. voltage
Check voltage at the relay coil with a D.C. voltmeter during the microwave cooking operation, dual grill cooking operation, or grill cooking operation.

DC. voltage indicated ..... Defective relay.
DC. voltage not indicated .... Check diode which is connected to the relay coil. If diode is good, control unit is defective.

RELAY SYMBOL	OPERATIONAL VOLTAGE	CONNECTED COMPONENTS
RY1	Approx. 24.0V D.C.	Oven lamp / Turntable motor / Cooling fan motor
RY2	Approx. 18.0V D.C.	Heating element
RY3	Approx. 18.0V D.C.	High voltage transformer

PROCEDURE LETTER	COMPONENT TEST
O	**PROCEDURES TO BE TAKEN WHEN THE FOIL PATTERN ON THE PRINTED WIRING BOARD (PWB) IS OPEN**

To protect the electronic circuits, this model is provided with a fine foil pattern added to the primary on the PWB, this foil pattern acts as a fuse. If the foil pattern is open, follow the troubleshooting guide given below for repair.
Problem: POWER ON, indicator does not light up.
CARRY OUT 3D CHECKS.

STEPS	OCCURRENCE	CAUSE OR CORRECTION
1	The rated AC voltage is not present at POWER terminal of CPU connector (CN-A).	Check supply voltage and oven power cord.
2	The rated AC voltage is present at primary side of low voltage transformer.	Low voltage transformer or secondary circuit defective. Check and repair.
3	Only pattern at "a" is broken.	*Insert jumper wire J1 and solder. (CARRY OUT 3D CHECKS BEFORE REPAIR)
4	Pattern at "a" and "b" are broken.	*Insert the coil RCILF2003YAZZ between "c" and "d". (CARRY OUT 3D CHECKS BEFORE REPAIR)

NOTE: *At the time of these repairs, make a visual inspection of the varistor for burning damage and examine the transformer with tester for the presence of layer short-circuit (check primary coil resistance). If any abnormal condition is detected, replace the defective parts.

CARRY OUT 4R CHECKS.

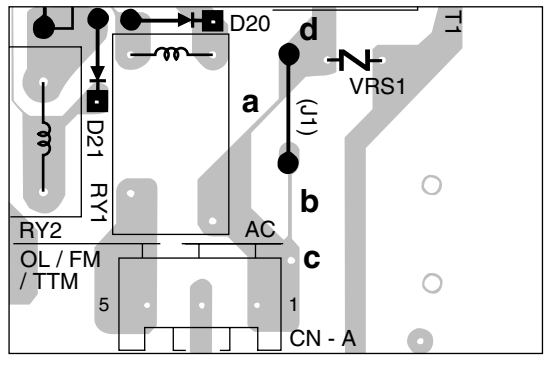

TOUCH CONTROL PANEL ASSEMBLY

OUTLINE OF TOUCH CONTROL PANEL

The touch control section consists of the following units.

(1) Switch Unit
(2) Control Unit

The principal functions of these units and the signals communicated among them are explained below.

Switch Unit
The switch unit is composed of a matrix, signals generated in the LSI are sent to the switch unit through R60 and R61.
When a switch button is touched, a signal is completed through the switch unit and passed back to the LSI through R50, R51, R52 and R53 to perform the function that was requested.

Control Unit
Control unit consists of LSI, power source circuit, relay circuit, back light circuit, synchronizing signal circuit, ACL circuit, buzzer circuit and indicator circuit.

1) LSI
This LSI controls the tact switch strobe signal, relay driving signal for oven function and indicator signal.

2) Power Source Circuit
This circuit generates voltage necessary in the control unite.

Symbol	Voltage	Application
VC	+5V	LSI(IC1)

3) Synchronizing Signal Circuit
The power source synchronizing signal is available in order to compose a basic standard time in the clock circuit. It accompanies a very small error because it works on commercial frequency.

4) ACL Circuit
A circuit to generate a signals which resets the LSI to the initial state when power is supplied.

5) Buzzer Circuit
The buzzer is responsive to signals from the LSI to emit audible sounds (tact switch touch sound and completion sound).

6) Stop Switch
A switch to "tell" the LSI if the door is open or closed.

7) Relay Circuit
To drive the magnetron, fan motor, turntable motor, grill heating element and light the oven lamp.

8) Indicator Circuit
This circuit consists of 4-digits, 12-segments and 3-common electrodes using a Liquid Crystal Display.

9) Encoder
The encoder converts the signal generated by LSI into the pulse signal, and the pulse signal is returned to the LSI.

10) Back Light Circuit
A circuit to drive the back light (Light emitting diodes LED1-LED4)

DESCRIPTION OF LSI

LSI(IXA089DR)

The I/O signal of the LSI(IXA089DR) are detailed in the following table.

Pin No.	Signal	I/O	Description
1-3	SEG21-SEG23	OUT	Terminal not used.
4	COM1	OUT	**Common data signal: COM1.** Connected to LCD (Pin No. 1)
5	COM2	OUT	**Common data signal: COM2.** Connected to LCD (Pin No. 2)
6	COM3	OUT	**Common data signal: COM3.** Connected to LCD (Pin No. 3)
7	COM4	OUT	Terminal not used.
8	VLC	IN	**Signal synchronized with commercial power source frequency**. Signal similar to VSS.
9	VSS	IN	**Power source voltage: 0V.** VSS voltage of power source circuit input.
10	XIN	IN	**Internal clock oscillation frequency setting input.** The internal clock frequency is set by inserting the ceramic filter oscillation circuit with respect to XOUT terminal.
11	XOUT	OUT	**Internal clock oscillation frequency control output.** Output to control oscillation input of XIN.
12-15	K00-K03	IN	**Terminal to change functions according to the Model.** DC voltage in accordance with the Model in operation is applied to set up its function.
16	TEST	IN	Connected to VC.
17	RESET	IN	**Auto clear terminal.** Signal is input to reset the LSI to the initial state when power is supplied. Temporarily set to "L" level the moment power is supplied, at this time the LSI is reset. Thereafter set at "H" level.
18	HOLD	IN/OUT	Connected to VDD.
19	INT2	IN	**Signal synchronized with commercial power source frequency.** This is the basic timing for time processing of LSI. 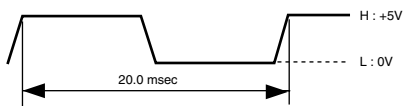
20	R81	IN	**Signal coming from encoder.** When the encoder is turned, the contacts of encoder make pulse signals. And pulse signals are input into R81.
21	INT1	IN	**Signal coming from encoder.** Signal similar to R81. Pulse signals are input into INT1.
22	R83	OUT	Terminal not used.
23	R90	IN	**To input signal which communicates the door open/close information to LSI.** Door open "L" level signal (0V). Door close "H" level (+5V)
24-25	R91-R92	OUT	Terminal not used.
26	VDD	IN	Connected to GND.
27	R40	OUT	**Signal to sound buzzer (2.0 kHz).** A: tact switch touch sound. B: Completion sound. 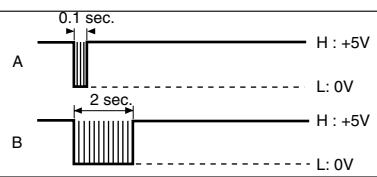
28	R41	OUT	**Grill heating element driving signal.** To turn on and off the grill heating element relay (RY2). "L" level during grill cooking or dual cooking; "H" level otherwise. 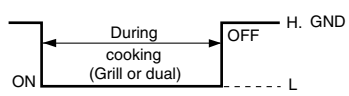

DESCRIPTION OF LSI

LSI(IXA089DR)

The I/O signal of the LSI(IXA089DR) are detailed in the following table

Pin No.	Signal	I/O	Description
29	R42	OUT	**Magnetron high-voltage circuit driving signal.** To turn on and off the cook relay (RY3). In 100% POWER operation, the signals hold "L" level during microwave cooking and "H" level while not cooking. In other cooking modes (70%, 50%, 30%, 10%) the signal turns to "H" level and "L" level in repetition according to the power level. ON/OFF time ratio in Micro cooking (a. 32second time base) MICRO COOK / ON / OFF 100% / 32sec. / 0sec. 70% / 24sec. / 8sec. 50% / 18sec. / 14sec. 30% / 12sec. / 20sec. 10% / 6sec. / 26sec. ON/OFF time ratio in Micro cooking (a. 48second time base) MICRO COOK / ON / OFF 100% / 48sec. / 0sec. 70% / 36sec. / 12sec. 50% / 26sec. / 22sec. 30% / 16sec. / 32sec. 10% / 8sec. / 40sec.
30	R43	OUT	**Oven lamp, fan motor and turntable motor driving signal.** To turn on and off shut off relay (RY1). The square waveform voltage is delivered to the RY1 driving circuit. 20.0 msec H : +5V L : 0V During cooking
31	R50	IN	**Signal coming from tact switch.** When tact switches SW1 is touched, a signal out of R61 will be input into R50. When no tact switch is touched, the signal is held at "H" level.
32	R51	IN	**Signal coming from tact switch.** When either of tact switches SW2 and SW5 is touched, a corresponding signal out of R60 and R61 will be input into R51. When no tact switch is touched, the signal is held at "H" level.
33	R52	IN	**Signal coming from tact switch.** When either of tact switches SW3 and SW6 is touched, a corresponding signal out of R60 and R61 will be input into R52. When no tact switch is touched, the signal is held at "H" level.
34	R53	IN	**Signal coming from tact switch.** When either of tact switches SW4 and SW7 is touched, a corresponding signal out of R60 and R61 will be input into R53. When no tact switch is touched, the signal is held at "H" level.
35	R60	OUT	**Tact switch strobe signal.** Signal applied to tact switch section. A pulse signal is input to R51, R52 or R53 terminal while the tact switch SW5, SW6 or SW7 is touched.
36	R61	OUT	**Tact switch strobe signal.** Signal applied to tact switch section. A pulse signal is input to R50, R51, R52 or R53 terminal while the tact switch SW1, SW2, SW3 or SW4 is touched.
37-38	R62-R63	OUT	Terminal not used.
39-42	R70-R73	OUT	Terminal not used.
43-54	SEG0 - SEG11	OUT	**Segment data signal.** Connected to LCD. The relation between signals are as follows: LSI signal (Pin No.) LCD (Pin No.) LSI signal (Pin No.) LCD (Pin No.) SEG 0 (1) ..... S12(4) SEG 6 (7) ..... S6(10) SEG 1 (2) ..... S11(5) SEG 7 (8) ..... S5(11) SEG 2 (3) ..... S10(6) SEG 8 (9) ..... S4(12) SEG 3 (4) ..... S9(7) SEG 9 (10) ..... S3(13) SEG 4 (5) ..... S8(8) SEG 10 (11) ..... S2(14) SEG 5 (6) ..... S7(9) SEG 11 (12) ..... S1(15)
55-57	SEG12-SEG14	OUT	Terminal not used.
58	VDD	IN	**Power source voltage input terminal.** Connected to GND.
59-64	SEG15-SEG20	OUT	Terminal not used.

TOUCH CONTROL

SERVICING

1. Precautions for Handling Electronic Components

This unit uses CMOS LSI in the integral part of the circuits. When handling these parts, the following precautions should be strictly followed. CMOS LSI have extremely high impedance at its input and output terminals. For this reason, it is easily influenced by the surrounding high voltage power source, static electricity charge in clothes, etc., and sometimes it is not fully protected by the built-in protection circuit.

In order to protect CMOS LSI.

1) When storing and transporting, thoroughly wrap them in aluminium foil. Also wrap PW boards containing them in aluminium foil.
2) When soldering, ground the technician as shown in the figure and use grounded soldering iron and work table.

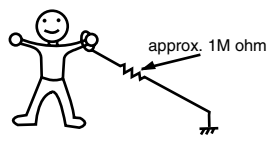

2. Shapes of Electronic Components

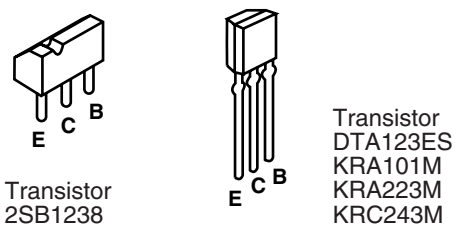

3. Servicing of Touch Control Panel

We describe the procedures to permit servicing of the touch control panel of the microwave oven and the precautions you must take when doing so.

To perform the servicing, power to the touch control panel is available either from the power line of the oven or from an external power source.

(1) Servicing the touch control panel with power supply of the oven :

CAUTION:
THE HIGH VOLTAGE TRANSFORMER OF THE MICROWAVE OVEN IS STILL LIVE DURING SERVICING AND PRESENTS A HAZARD .

Therefore, when checking the performance of the touch control panel, put the outer cabinet on the oven to avoid touching the high voltage transformer, or unplug the primary terminal (connector) of the high voltage transformer to turn it off; the end of such connector must be insulated with an insulating tape. After servicing, be sure to replace the leads to their original locations.

A. On some models, the power supply cord between the touch control panel and the oven itself is so short that the two can't be separated.

For those models, check and repair all the controls (sensor-related ones included) of the touch control panel while keeping it connected to the oven.

B. On some models, the power supply cord between the touch control panel and the oven is long enough that they may be separated from each other. For those models, therefore, it is possible to check and repair the controls of the touch control panel while keeping it apart from the oven; in this case you must short both ends of the door sensing switch (on PWB) of the touch control panel with a jumper, which brings about an operational state that is equivalent to the oven door being closed. As for the sensor-related controls of the touch control panel, checking them is possible if the dummy resistor(s) with resistance equal to that of the controls are used.

(2) Servicing the touch control panel with power supply from an external power source:

Disconnect the touch control panel completely from the oven, and short both ends of the door sensing switch (on PWB) of the touch control panel, which brings about an operational state that is equivalent to the oven door being closed. Connect an external power source to the power input terminal of the touch control panel, then it is possible to check and repair the controls of the touch control panel; it is also possible to check the sensor-related controls of the touch control panel by using the dummy resistor(s).

4. Servicing Tools

Tools required to service the touch control panel assembly.

1) Soldering iron: 30W
   (It is recommended to use a soldering iron with a grounding terminal.)
2) Oscilloscope: Single beam, frequency range: DC - 10MHz type or more advanced model.
3) Others: Hand tools

5. Other Precautions

1) Before turning on the power source of the control unit, remove the aluminium foil applied for preventing static electricity.
2) Connect the connector of the key unit to the control unit being sure that the lead wires are not twisted.
3) After aluminium foil is removed, be careful that abnormal voltage due to static electricity etc. is not applied to the input or output terminals.
4) Attach connectors, electrolytic capacitors, etc. to PWB, making sure that all connections are tight.
5) Be sure to use specified components where high precision is required.

COMPONENT REPLACEMENT AND ADJUSTMENT

WARNING: Avoid possible exposure to microwave energy. Please follow the instructions below before operating the oven.

1. Disconnect oven from power supply.
2. Make sure that a definite" click" can be heard when the microwave oven door is unlatched. (Hold the door in a closed position with one hand, then push the door open button with the other, this causes the latch leads to rise, it is then possible to hear a "click' as the door switches operate.)
3. Visually check the door and cavity face plate for damage (dents, cracks, signs of arcing etc.).

Carry out any remedial work that is necessary before operating the oven.
Do not operate the oven if any of the following conditions exist;

1. Door does not close firmly.
2. Door hinge, support or latch hook is damaged.
3. The door gasket or seal or damaged.
4. The door is bent or warped.
5. There are defective parts in the door interlock system.
6. There are defective parts in the microwave generating and transmission assembly.
7. There is visible damage to the oven.

Do not operate the oven:
1. Without the RF gasket (Magnetron).
2. If the wave guide or oven cavity are not intact.
3. If the door is not closed.
4. If the outer case (cabinet) is not fitted.

Please refer to 'OVEN PARTS, CABINET PARTS, DOOR PARTS', when carrying out any of the following removal procedures:

OUTER CASE REMOVAL

To remove the outer case proceed as follows.
1. Disconnect oven from power supply.
2. Remove the screws from rear and along the side edge of case.
3. Slide the entire case back about 3cm to free it from retaining clips on the cavity face plate.
4. Lift the entire case from the oven.
5. Discharge the H.V. capacitor before carrying out any further work.
7. Do not operate the oven with the outer case removed.

N.B.; Step 1, 2 and 6 form the basis of the 3D checks.

CAUTION: DISCHARGE HIGH VOLTAGE CAPACITOR BEFORE TOUCHING ANY OVEN COMPONENT OR WIRING.

HIGH VOLTAGE COMPONENTS REMOVAL (HIGH VOLTAGE CAPACITOR AND HIGH VOLTAGE RECTIFIER)

To remove the components, proceed as follows.
1. CARRY OUT 3D CHECKS.
2. Lift up the cover of the fan duct B.
3. Disconnect all the leads and terminals of high voltage rectifier from the high voltage capacitor.
4. Remove one (1) screw holding capacitor holder and high voltage rectifier to the base plate.
5. Release the capacitor holder from the base plate.
6. Now, the high voltage rectifier should be free.
7. Remove the capacitor from the capacitor holder.
8. Now the capacitor should be free.

CAUTION: WHEN REPLACING HIGH VOLTAGE RECTIFIER, ENSURE THAT THE CATHODE (EARTH) CONNECTION IS SECURELY FIXED TO THE CAPACITOR HOLDER AND BASE PLATE WITH AN EARTHING SCREW.

HIGH VOLTAGE TRANSFORMER REMOVAL

1. CARRY OUT 3D CHECKS.
2. Disconnect the filament leads of high voltage transformer from high voltage capacitor and the magnetron.
3. Disconnect the H.V. secondary wire from the high voltage capacitor.
4. Disconnect the main wire harness from the high voltage transformer.
5. Remove the four (4) screws holding the transformer to base plate.
8. Remove the transformer.
7. Now the high voltage transformer is free.

OVEN LAMP SOCKET REMOVAL

1. CARRY OUT 3D CHECKS
2. Disconnect the wire leads from the oven lamp.
3. Lift up the oven lamp by releasing the two (2) tabs of the air intake duct.
4. Now, the oven lamp is free.

MAGNETRON REMOVAL

1. CARRY OUT 3D CHECKS.
2. Remove the two (2) screw holding the chassis support to the oven cavity and the magnetron.
3. Disconnect the H.V. wire B and filament lead of the transformer from the magnetron.
4. Release the chassis support from the oven cavity.
5. Move the air intake duct to left.
6. Carefully remove two (2) screws holding magnetron to waveguide, when removing the screws hold the magnetron to prevent it from falling.
7. Remove the magnetron from the waveguide with care so the magnetron antenna is not hit by any metal object around the antenna.
8. Remove the magnetron cushion from the magnetron.

CAUTION: WHEN REPLACING THE MAGNETRON, BE SURE THE R.F. GASKET IS IN PLACE AND THE MAGNETRON MOUNTING SCREWS ARE TIGHTENED SECURELY.

FAN MOTOR REPLACEMENT

REMOVAL

1. CARRY OUT 3D CHECKS.
2. Diconnect the wire leads from the fan motor.
3. Remove the two(2) screws holding the fan motor to the oven cavity back plate.
4. Now the fan motor is free.
5. Remove the fan blade from the fan motor shaft according to the following procedure.
   1) Hold the edge of the rotor of the fan motor by using a pair of groove joint pliers.

      CAUTION:
      - **Make sure that any pieces do not enter the gap between the rotor and the starter of the fan motor. Because the rotor is easy to be shaven by pliers and metal pieces may be produced.**
      - **Do not let the pliers touch the coil of the fan motor because the coil may be cut or damaged.**
      - **Do not distort the bracket by touching with the pliers.**

   2) Remove the fan blade from the shaft of the fan motor by pulling and rotating the fan blade with your hand.
   3) Now, the fan blade will be free.

      CAUTION:
      - **Do not use this removed fan blade again. Because the hole (for shaft) of it may become bigger than a standard one.**
6. Now, the fan motor is free.

INSTALLATION

1. Install the fan blade to the fan motor shaft according the following procedure.
   1) Hold the centre of the bracket which supports the shaft of the fan motor on the flat table.
   2) Apply the screw lock tight into the hole (for shaft) of the fan blade.
   3) Install the fan blade to the shaft of fan motor by pushing the fan blade with a small, light weight, ball peen hammer or rubber mallet.

      CAUTION:
      - **Do not hit the fan blade when installed because the bracket may be deformed.**
      - **Make sure that the fan blade rotates smoothly after installation.**
      - **Make sure that the axis of the shaft is not slanted.**
2. Install the fan motor assembly to the oven cavity back plate with the two (2) screws.
3. Re-connect the wire leads to the fan motor.

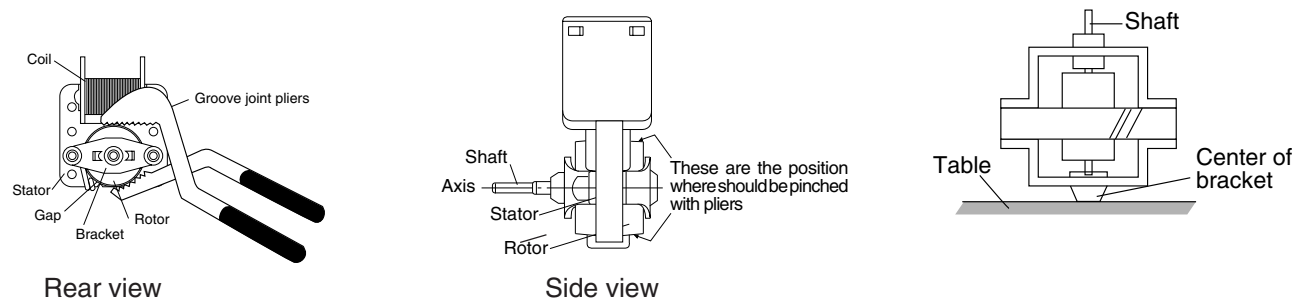

Figure C-1 Fan motor replacement

TURNTABLE MOTOR REPLACEMENT

Removal

1. Disconnect the oven from the power supply.
2. Remove the turntable and roller stay from the oven cavity.
3. Turn the oven over.
4. Cut the four (4) bridges holding the turntable motor cover to the base plate with the cutting pliers as shown in Figure C-4 (a).

CAUTION: DO NOT DROP THE TURNTABLE MOTOR COVER INTO THE OVEN AFTER CUTTING THE BRIDGES. BECAUSE IT WILL DAMAGE THE WIRE LEADS OF THE MOTOR AND IT IS DIFFICULT TO REMOVE IT OUT OF THE OVEN.

5. Remove the turntable motor cover from the base plate.
6. Disconnect the wire leads from the turntable motor.
7. Remove the one (1) screw holding the turntable motor to the oven cavity.
8. Remove the turntable motor from the oven cavity.
9. Now, the turntable motor is free.

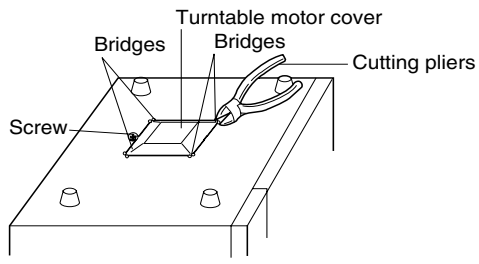

Figure C-4(a). Turntable Motor Cover Removal

Re-install

1. Remove the any sharp edges on the turntable motor cover and the base plate with the cutting pliers.
2. Re-install the turntable motor to the oven cavity with the one (1) screw.
3. Re-connect the wire leads to the turntable motor.
4. Insert the tab of the turntable motor cover into the hole of the base plate as shown in Figure C-4(b).
6. Re-install the turntable motor cover to the base plate with a LX-CZA001URE0 screw.

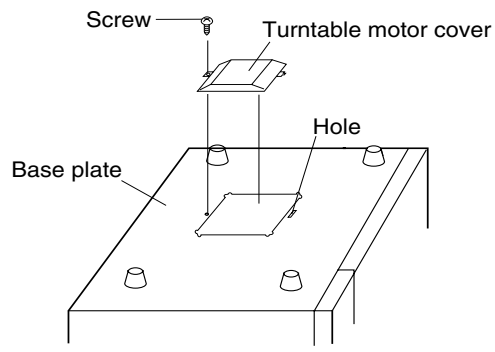

Figure C-4(b). Turntable Motor Cover Re-install

POSITIVE LOCK® CONNECTOR REMOVAL

1. CARRY OUT 3D CHECKS.
2. Push the lever of positive lock® connector.
3. Pull out the positive lock® connector.

CAUTION: WHEN YOU (SERVICE ENGINEERS) CONNECT THE POSITIVE LOCK® CONNECTORS TO THE TERMINALS, CONNECT THE POSITIVE LOCK® SO THAT THE LEVER FACE YOU (SERVICE ENGINEERS).

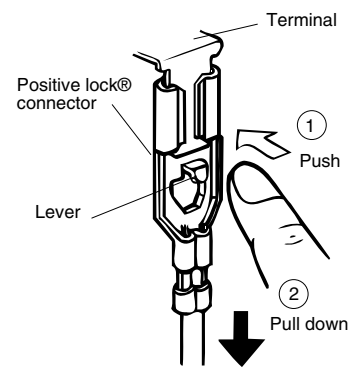

Figure C-2 Positive lock® connector

COMPONENT REPLACEMENT AND ADJUSTMENT

POWER CORD REMOVAL

Removal

1. CARRY OUT 3D CHECKS.
2. Remove the single (1) screw holding the green/yellow wire to the cavity top plate.
3. Disconnect the leads of the power supply cord from the noise filter, referring to the Figure C-3 (a).
4. Release the power supply cord from the rear cabinet.
5. Now, the power supply cord is free.

Re-install

1. Insert the moulding cord stopper of power supply cord into the square hole of the rear cabinet, referring to the Figure C-3 (b). Installation of Power supply cord.
2. Install the earth wire lead of power supply cord to the oven cavity with one (1) screw and tighten the screw.
3. Connect the brown and blue wire leads of power supply cord to the noise filter correctly, referring to the Pictorial Diagram.

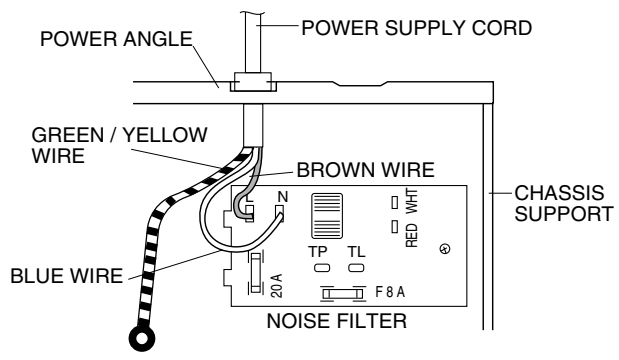

Figure C-3 (a) Replacement of Power Supply Cord

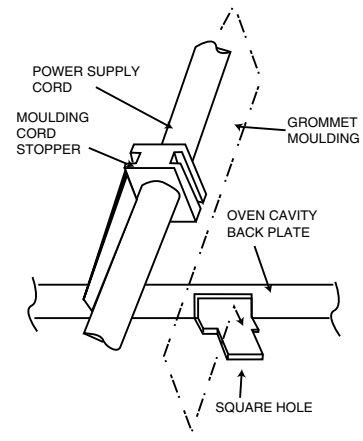

Figure C-3 (b) Replacement of Power Supply Cord

CONTROL PANEL ASSEMBLY REMOVAL

1. CARRY OUT 3D CHECKS.
2. Disconnect the all leads and connectors from the control unit.
3. Remove the one (1) screw holding the control panel to the oven cavity and remove the control panel.
4. Lift up the control panel assembly and pull it forward.
5. Now the control panel assembly is free.

GRILL HEATING ELEMENT REMOVAL

1. CARRY OUT 3D CHECKS
2. Disconnect the wire leads to the grill heating elements.
3. Remove the one (1) screw holding the exhaust duct to the oven cavity.
4. Push the two tabs holding the reflector to the oven cavity.
5. Release the reflector from the oven cavity by sliding it.
6. Now the grill heating element assembly is free.
7. Remove the grill heater angle from the reflector.
8. Remove the two (2) screws holding the short-plate to the grill heating elements.
9. Now the individual grill heating elements are free.

LATCH SWITCH, MONITOR SWITCH AND STOP SWITCH REMOVAL

1. CARRY OUT 3D CHECKS.
2. Remove the control panel assembly referring to "CONTROL PANEL REPLACEMENT".
3. Remove the open lever from the oven cavity front plate by removing the control panel assy.
4. Disconnect the leads from all switches.
5. Remove the one (1) screw holding the latch hook to the oven cavity.
6. Remove the latch hook.
7. Remove the switch(s) from the latch hook by pushing the retaining tab backwards slightly and turning the switch(s) on the post.
8. Now, the switch(s) is free.

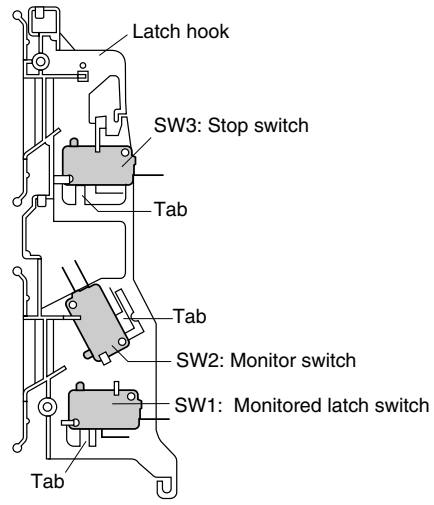

Figure C-5 Switches

REMOVAL

1. Disconnect the power supply cord.
2. Open the door slightly.
3. Remove the choke cover taking care not to break clips by inserting an iron plate (thickness of about 0.5mm) or flat type screw driver to the gap between the choke cover and door panel as shown Figure C-4 to free the engaged parts.
4. Release choke cover from door panel.
5. Now choke cover is free.

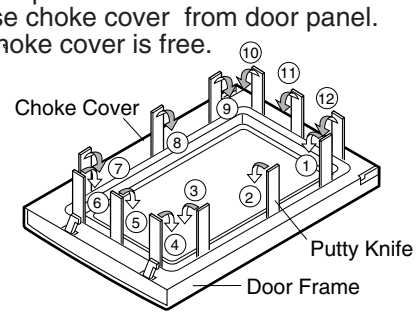

Figure C-4. Door Disassembly

6. Release two (2) pins of door panel from two (2) holes of upper and lower oven hinges by lifting up.
7. **1. Remove door assy by removing screws (4).**
8. Release door panel from tabs of door frame and remove door frame by sliding the door panel downward.
9. Now, door panel with inner sealer film is free.
10. Tear inner sealer film from door panel.
11. Now, door panel is free.
12. Slide latch head upward and remove it from door frame with releasing latch spring from door frame and latch head.
13. Now, latch head and latch spring are free.
14. **Remove Glass Stopper (2)Screws (noting position of stopper) and slide stopper down while lifting up,remove door handle.**
15. **Slide glass towards Glass Stopper position and then down towards the lower edge of the door frame.**
16. **Lift upper edge of glass, which will now be free from upper clips and remove from lower clips.**
17. **Refitting is a reversal of the above when refitting, ensure the glass and the glass stopper is in the original position.**

RE-INSTALL

1. Re-install the outer door glass to the door frame with the glass stopper.
2. Locate door handle into door frame and door handle
3. Hold the glass stopper with the two (2) screws.
4. Re-install latch spring to the head. Re-install latch spring to the door frame. Re-install latch head to the door frame.
5. Re-install door panel to door frame by fitting tabs of door frame to holes of door panel.
6. Put sealer film on door panel. Refer to “Inner Sealer Film” and figure C-6, on how to handle the new film.
7. Catch two (2) pins of door panel on two (2) hole of upper and lower oven hinges.
8. Re-install choke cover to door panel by pushing.

Note: After any service to the door;

(A) Make sure that monitored latch switch, stop switch and monitor switch are operating properly. (Refer to chapter “Test Procedures”.).

(B) An approved microwave survey meter should be used to assure compliance with proper microwave radiation emission limitation standards.

After any service, make sure of the following :

1. Door latch heads smoothly catch latch hook through latch holes and that latch head goes through center of latch hole.
2. Deviation of door alignment from horizontal line of cavity face plate is to be less than 1.0mm.
3. Door is positioned with its face pressed toward cavity face plate.
4. Check for microwave leakage around door with an approved microwave survey meter. (Refer to Microwave Measurement Procedure.)

Note: The door on a microwave oven is designed to act as an electronic seal preventing the leakage of microwave energy from oven cavity during cook cycle. This function does not require that door be air-tight, moisture (condensation)-tight or light-tight. Therefore, occasional appearance of moisture, light or sensing of gentle warm air movement around oven door is not abnormal and do not of themselves, indicate a leakage of microwave energy from oven cavity.

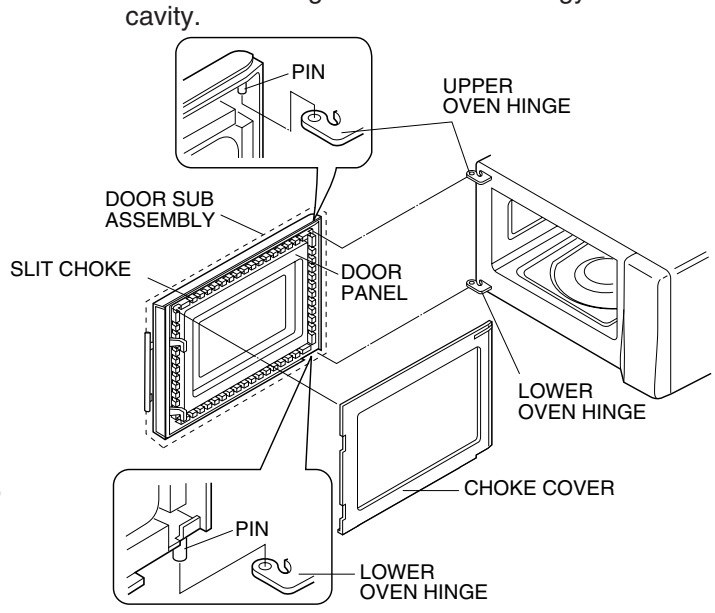

Figure C-5. Door Replacement

NOTE: When carrying out any repair to the door, do not bend or warp the slit choke (tabs on the door panel assembly) to prevent microwave leakage.

INNER SEALER FILM

Installation

1. Tear away the backing film.
3. Put the pasted side of the inner sealer film on the door panel.

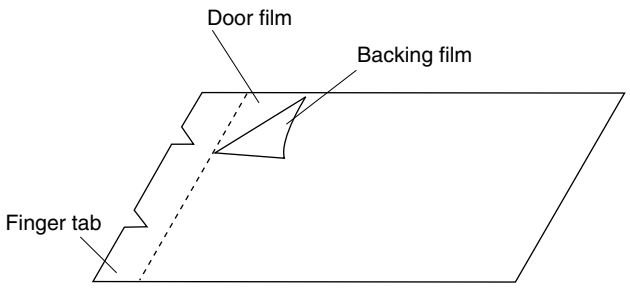

Figure C-6. Inner Sealer Film

MICROWAVE MEASUREMENT

After adjustment of door latch switches, monitor switch and door are completed individually or collectively, the following leakage test must be performed with a survey instrument and it must be confirmed that the result meets the requirements of the performance standard for microwave oven.

REQUIREMENT
The safety switch must prevent microwave radiation emission in excess of 5mW/cm2 at any point 5cm or more from external surface of the oven.

PREPARATION FOR TESTING:
Before beginning the actual test for leakage, proceed as follows;

1. Make sure that the test instrument is operating normally as specified in its instruction booklet.
   Important:
   Survey instruments that comply with the requirement for instrumentations as prescribed by the performance standard for microwave ovens must be used for testing.
   Recommended instruments are:
   NARDA 8100
   NARDA 8200
   HOLADAY HI 1500
   SIMPSON 380M
2. Place the oven tray into the oven cavity.
3. Place the load of 275 ± 15ml of water initially at 20 ± 5°C in the center of the oven tray. The water container should be a low form of 600 ml beaker with inside diameter of approx. 8.5cm and made of an electrically non-conductive material such as glass or plastic.
   The placing of this standard load in the oven is important not only to protect the oven, but also to insure that any leakage is measured accurately.
4. Close the door and turn the oven ON with the timer set for several minutes. If the water begins to boil before the survey is completed, replace it with 275ml of cool water.
5. Move the probe slowly (not faster that 2.5cm/sec.) along the gap.
6. The microwave radiation emission should be measured at any point of 5cm or more from the external surface of the oven.

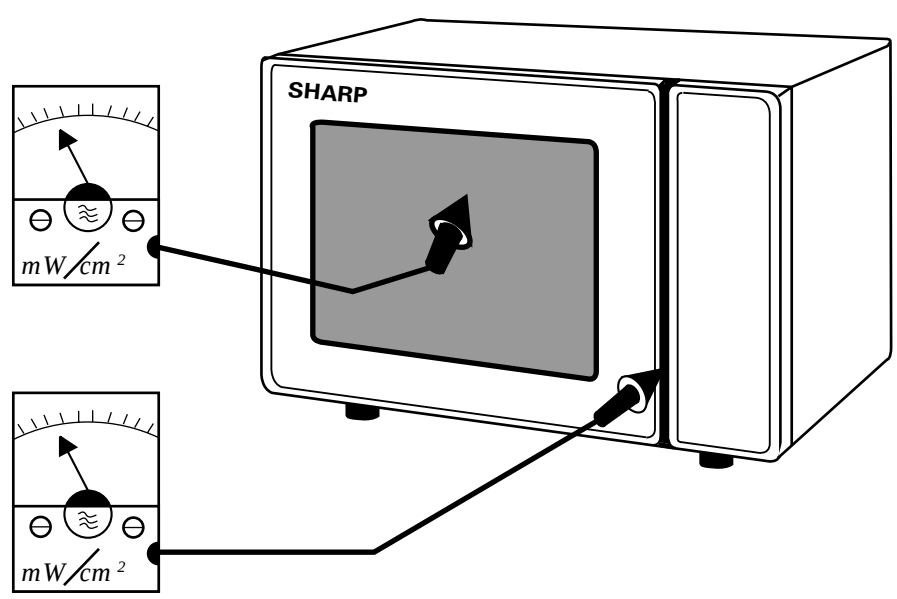

Microwave leakage measurement at 5 cm distance

TEST DATA AT A GLANCE

Parts	Symbol	Value / Data
Fuse	F1	F8A
Fuse	F2	20A
Thermostat (HVT.)	TC1	150°C OFF 96°C ON
Thermostate (OVEN)	TC2	150°C OFF 130°C ON
Grill heating element	GH	Approx. 27.9 Ω x 2 = 55.8Ω, 1.0 kW (500W x 2) Insulation resistance > 10 MΩ
Oven lamp	OL	240–250 V 25W
High voltage capacitor	C	AC 2100V 0.97μF
Magnetron	MG	Filament < 1Ω Filament – chassis ∞ ohm.
Power transformer	T	Filament winding < 1Ω Secondary winding Approx. 142 Ω / Primary winding Approx. 2 Ω

TEST POINTS ON CONTROL UNIT

In/Out put terminal	Test Point	Volt	Resistance (Disconnect the powerand door is closed)
Input terminal (Power supply)	A1 - A3	230 V	Approx. 1.04 kΩ
Input terminal (Stop switch)	B1 - B2	-	0
Output terminal (Grill heating element)	NO. of RY2 - A3	230 V	Approx. 370 Ω
Output terminal (Oven lamp, fan motor and turntable motor)	A3 - A5	230 V	Approx. 180 Ω
Output terminal (Earth)	B2 - Chassis	-	0
Output terminal (High voltage transformer)	NO. of RY3 - A3	230V	Approx. 370 Ω

WARNING: DISCONNECT THE PLUG WHEN MEASURING RESISTANCE.

WIRING / RE-WIRING

WARNING: Before carrying out any work carry out 3D checks

1) **D**isconnect the supply.
2) **D**oor opened, and wedged open.
3) **D**ischarge high voltage capacitor.

RE-WIRING

Ensure the following:

1. Wires must not touch:
   a) High voltage parts.
   (Magnetron, high voltage transformer, high voltage capacitor and high voltage rectifier assembly)
   b) Parts that become hot.
   (Heating elements, oven lamp, oven cavity magnetron and high voltage transformer)
   c) Sharp edges.
   (Bottom plates, oven cavity, waveguide flange, chassis support and other metallic parts)
   d) Movable parts.
   (Fan blade, any motor, switch, switch lever and open button)
2. Positive lock connectors are fitted correctly. Ensure the locking pin is located correctly.
3. Wires are connected correctly as per pictorial diagram.
4. No wire leads are trapped by the outer wrap.

SCHEMATIC DIAGRAMS

SCHEMATIC
NOTE: CONDITION OF OVEN
1. DOOR CLOSED.
2. PLUG CONNECTED.

Note:
AC CORD CONNECTION
BRN : BROWN
BLU : BLUE
G-Y : GREEN AND YELLOW STRIPE
/18 : SECTIONAL AREA OF 1 .5mm²MIN.
★ Indicates components with potential above 250 V.

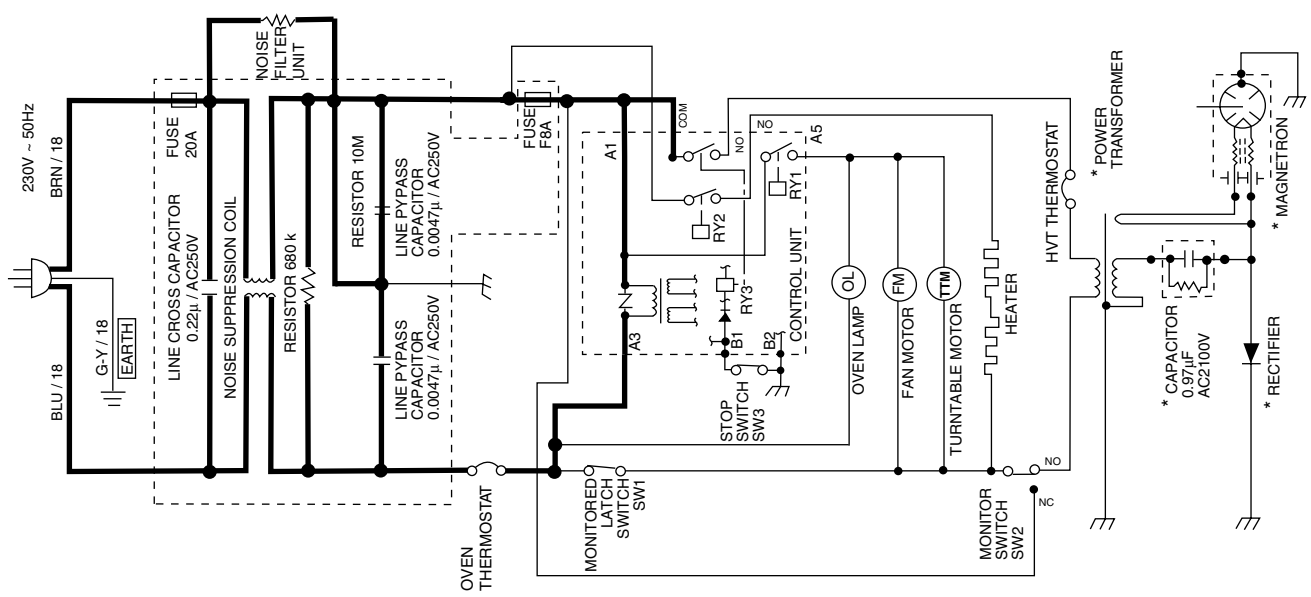

Figure O-1 Oven Schematic-OFF Condition

SCHEMATIC
NOTE: CONDITION OF OVEN
1. DOOR CLOSE.
2. COOKING TIME PROGRAMMED.
3. MICROWAVE PAD TOUCHED ONCE.
4. START KEY TOUCHED.

Note:
AC CORD CONNECTION
BRN : BROWN
BLU : BLUE
G-Y : GREEN AND YELLOW STRIPE
/18 : SECTIONAL AREA OF 1.5mm²MIN.
★ Indicates components with potential above 250 V.

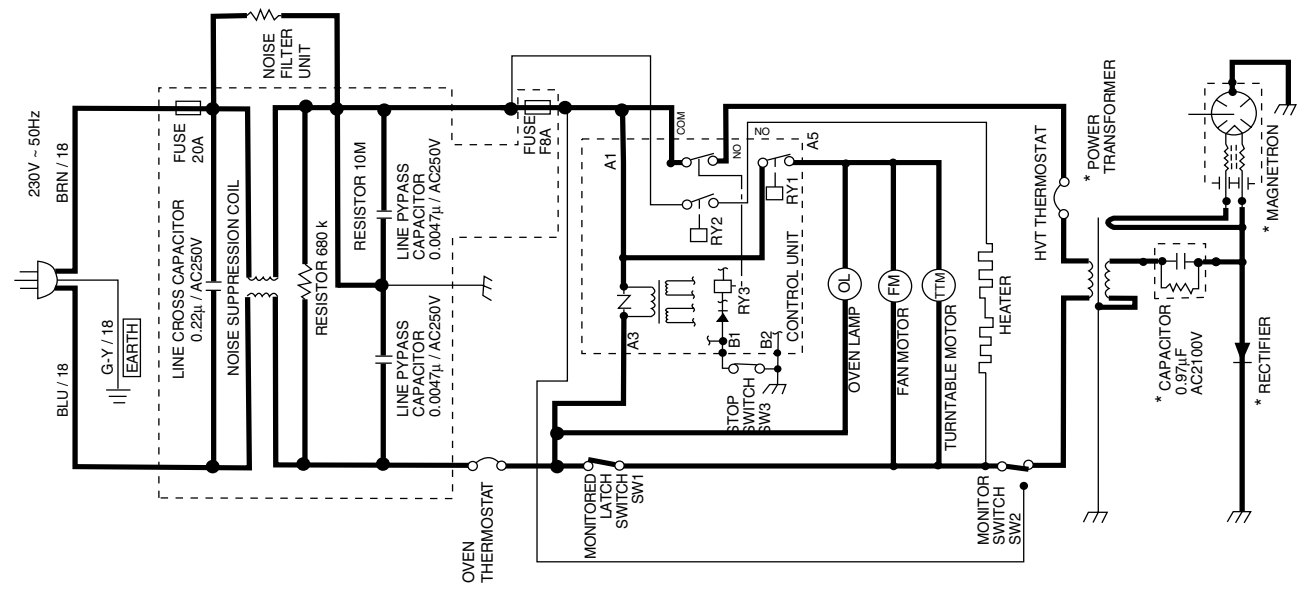

Figure O-2 Oven Schematic-Microwave Cooking Condition

SCHEMATIC DIAGRAMS

SCHEMATIC
NOTE: CONDITION OF OVEN
1. DOOR CLOSED.
2. COOKING TIME PROGRAMMED.
3. GRILL KEY TOUCHED.
3. START KEY TOUCHED.

Note:
AC CORD CONNECTION
BRN : BROWN
BLU : BLUE
G-Y : GREEN AND YELLOW STRIPE
/18 : SECTIONAL AREA OF 1 .5mm²MIN.
★ Indicates components with potential above 250 V.

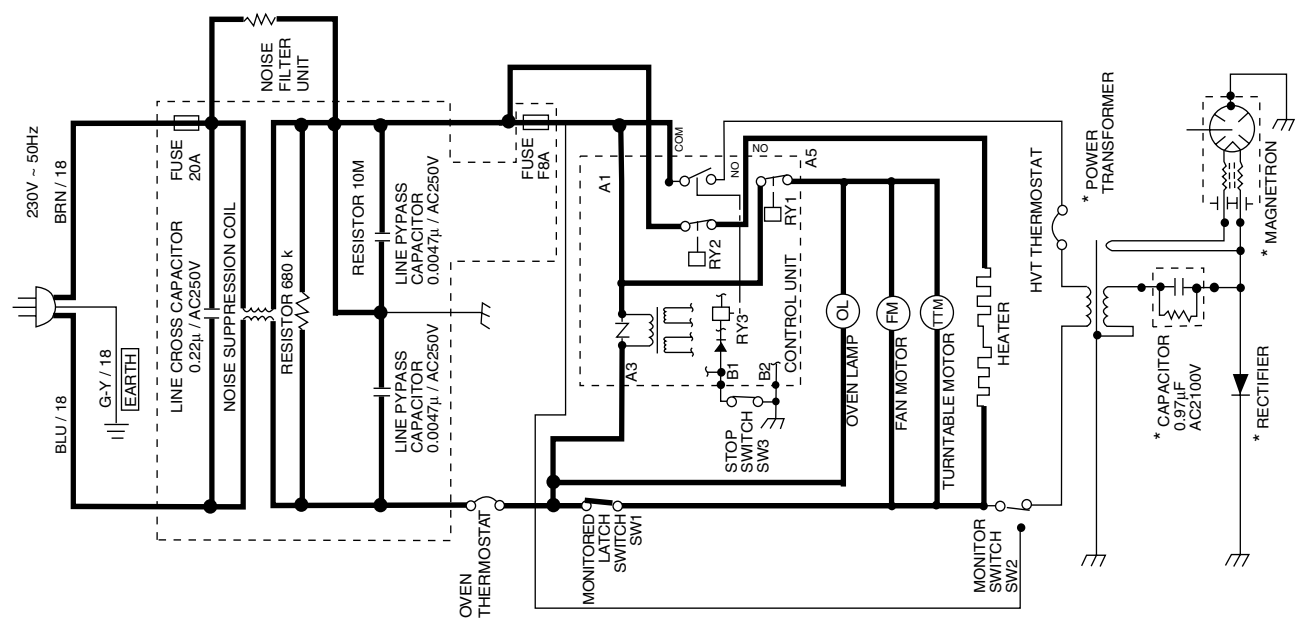

Figure O-3 Oven Schematic-Grill Cooking Condition

SCHEMATIC
NOTE: CONDITION OF OVEN
1. DOOR CLOSED.
2. COOKING TIME PROGRAMMED.
3. COMBI GRILL KEY TOUCHED.
3. START KEY TOUCHED.

Note:
AC CORD CONNECTION
BRN : BROWN
BLU : BLUE
G-Y : GREEN AND YELLOW STRIPE
/18 : SECTIONAL AREA OF 1 .5mm²MIN.
★ Indicates components with potential above 250 V.

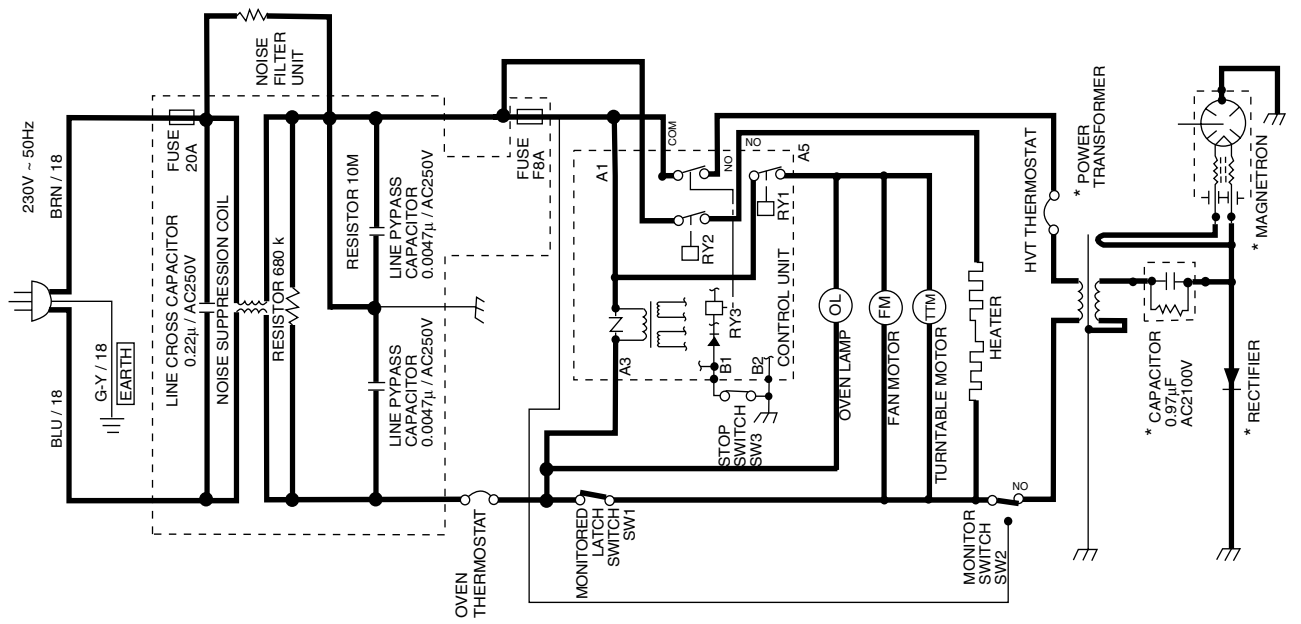

Figure O-4 Oven Schematic-Dual Cooking Condition

PICTORIAL DIAGRAM

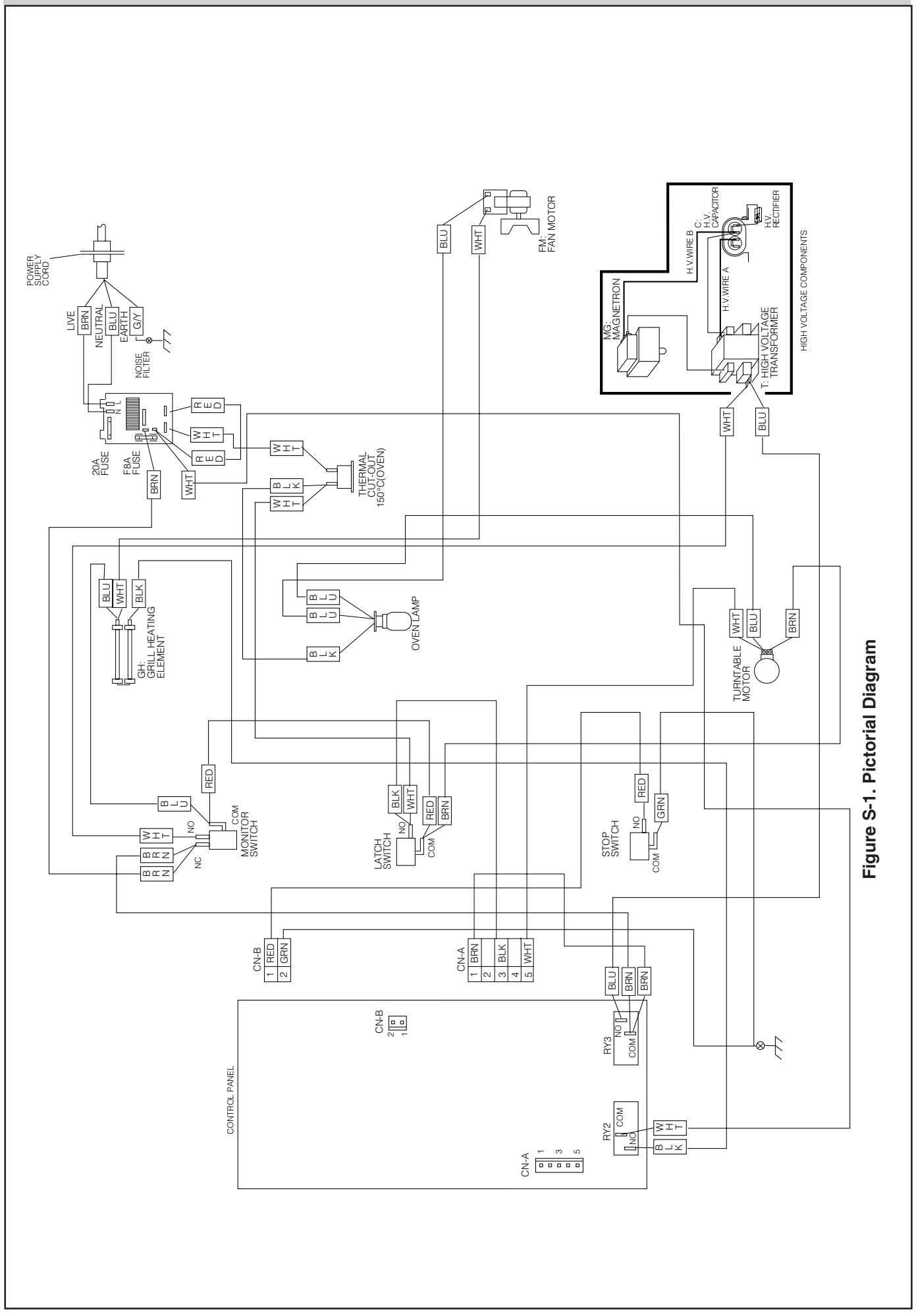

Figure S-1. Pictorial Diagram

CONTROL PANEL CIRCUIT DIAGRAM

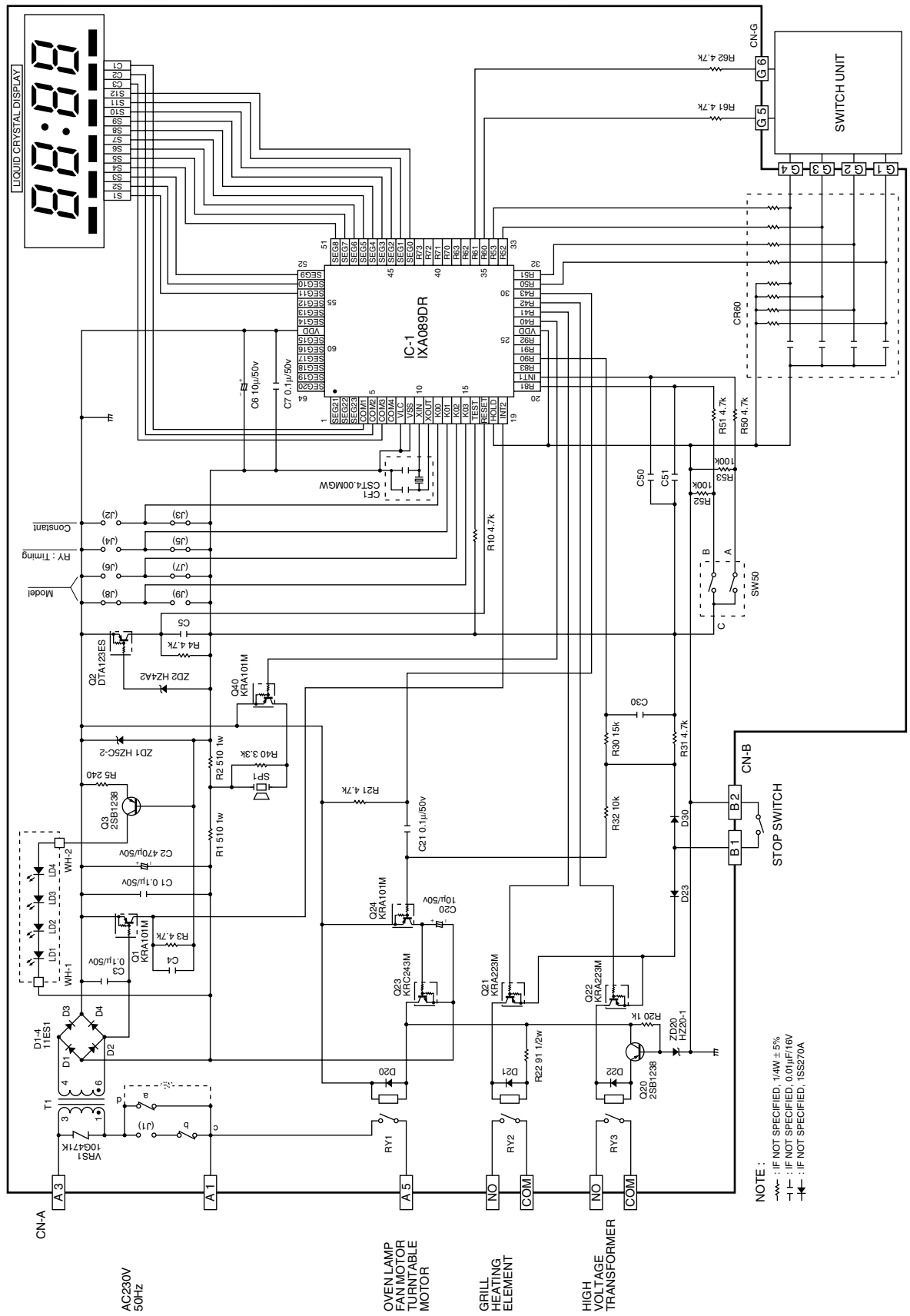

Figure S-2. Control Panel Circuit

SWITCH UNIT CIRCUIT DIAGRAM

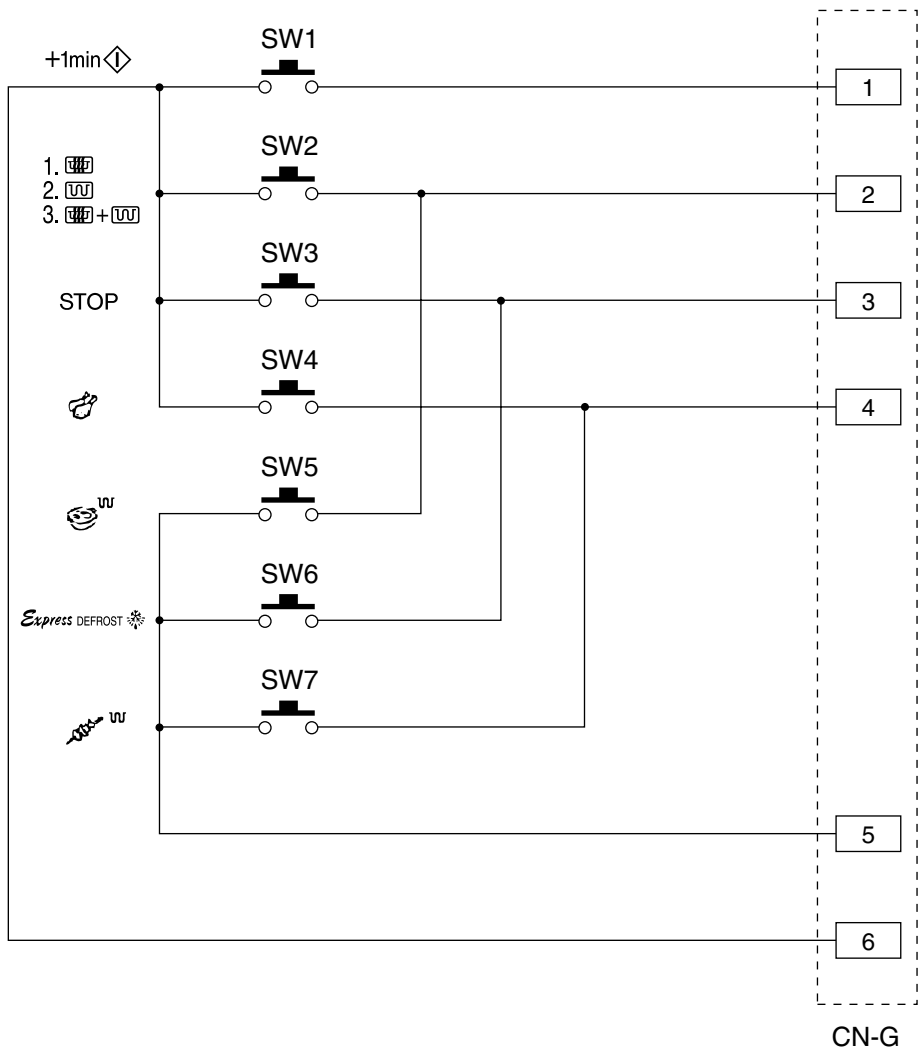

Figure S-3. Switch unit circuit

PRINTED WIRING DIAGRAM

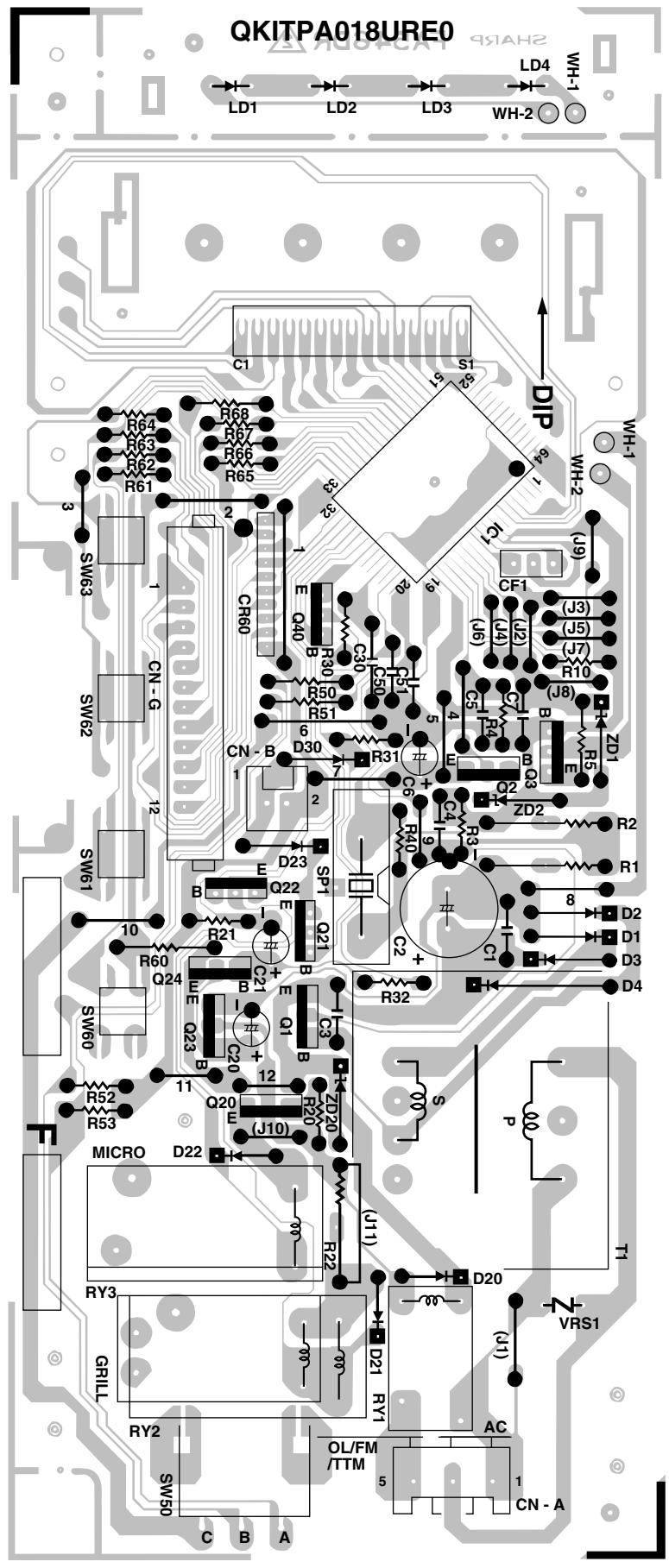

Figure S-4. Printed Wiring Board

PRINTED WIRING BOARD OF SWITCH UNIT DIAGRAM

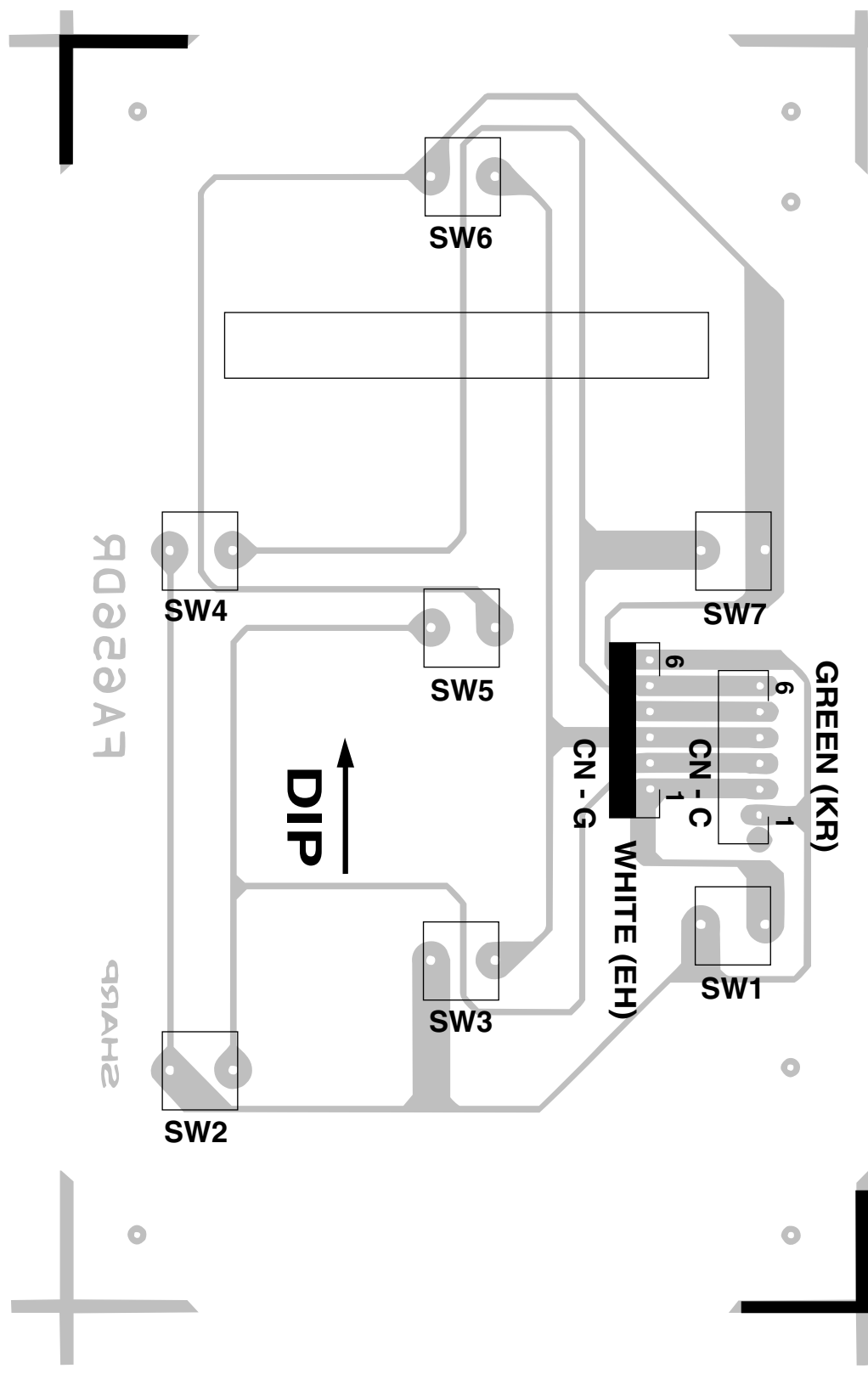

Figure S-4. Printed Wiring Board of Switch

PARTS LIST

Note: The parts marked "*" are used in voltage more than 250V. The parts marked Δ may cause undue microwave exposure
"§" MARK: SPARE PARTS-DELIVERY SECTION

REF. NO.	PART NO.	§	DESCRIPTION	Q'TY	CODE	
			ELECTRIC PARTS			
1-1	RH-DZA048WRE0	U	H.V. rectifier	1	AM	*
1-2	RC-QZA238WRE0	U	High voltage capacitor	1	AR	*
1-3	QSW-MA146WRZZ	J	Monitor switch	1	AC	
1-4	QSW-MA147WRZZ	J	Monitored latch switch	1	AG	
1-5	QSW-MA147WRZZ	J	Stop switch	1	AG	
1-6	FPWBFA309WRE2	U	Noise filter	1	AT	
1-7	QFS-CA025WRE0	U	Fuse F8A	1	AC	
1-8	QFS-BA009WREO	U	Fuse 20A	1	AC	
1-11	RTHM-A124WRZZ	U	Thermal cut-out 145°C (Oven)	1	AH	
1-13	QACCVAOO4URE2	U	Power supply cord	1	AQ	
1-14	RMOTEA003URE0	U	Fan motor	1	AQ	
1-15	RV-MZA243WRE1	U	Magnetron	1	BH	Δ*
1-16	RLMPTA066WRE0	U	Oven lamp/Socket	1	AK	
1-17	RMOTDA226WRE0	U	Turntable motor	1	AQ	
1-18	RTRN-A018URE0	U	Power transformer	1	BE	*
			CABINET PARTS			
2-1	GCABUA046URP0	U	Outer case cabinet (SUS)	1	AX	Δ
2-2	GLEGPA057WRE0	U	Foot	2	AB	
			CONTROL PANEL PARTS			
3- 1	DPWBFA165URK0	U	Control unit	1	BN	
3- 1A	QCNCMA430DRE0	U	3-pin connector (CN-A)	1	AC	
3- 1B	QCNCMA414DRE0	U	2-pin connector (CN-B)	1	AB	
3- 1C	QW-QZA003URE2	U	Lead wire (WH-1, WH-2)	2	AB	
3- 1D	RLCDSA036DRE0	U	Liquid crystal display	1	AP	
3- 1E	LHLD-A002URF1	U	LCD holder	1	AC	
3- 1F	PSHEPA569WRE0	U	LED sheet	1	AC	
3- 1G	QCNCMA151DREZ	U	6-pin connector (CN-G)	1	AB	
C1	RC-KZA087DRE0	U	Capacitor 0.1 uF 50V	1	AB	
C2	VCEAG31HW477M	U	Capacitor 470 uF 50V	1	AA	
C3	RC-KZA087DRE0	U	Capacitor 0.1 uF 50V	1	AB	
C4-5	VCKYD41CY103N	U	Capacitor 0.01 uF 16V	2	AA	
C6	VCEAG31HW106M	U	Capacitor 10 uF 50V	1	AB	
C7	RC-KZA087DRE0	U	Capacitor 0.1 uF 50V	1	AB	
C20	VCEAG31HW106M	U	Capacitor 10 uF 50V	1	AB	
C21	RC-KZA087DRE0	U	Capacitor 0.1 uF 50V	1	AB	
C30	VCKYD41CY103N	U	Capacitor 0.01 uF 16V	1	AA	
C50-51	VCKYD41CY103N	U	Capacitor 0.01 uF 16V	2	AA	
CF1	RCRS-A012DRE0	U	Ceramic resonator	1	AD	
CR60	RMPTEA011DRE0	U	Capacitor array	1	AG	
D1-4	VHD11ES1///-1	U	Diode (11ES1)	4	AB	
D20-23	VHD1SS270A/-1	U	Diode (1SS270ATA)	4	AA	
D30	VHD1SS270A/-1	U	Diode (1SS270ATA)	1	AA	
IC1	RH-IXA089DRZZ	U	LSI	1	BA	
LD1-4	VHPSLZ781C9-3	U	Light emitting diode	4	AC	
Q1	VSKRA101M//-3	U	Transistor (KRA101M)	1	AA	
Q2	VSDTA123ES/-3	U	Transistor (DTA123ES)	1	AB	
Q3	VS2SB1238//-3	U	Transistor (2SB1238)	1	AD	
Q20	VS2SB1238//-3	U	Transistor (2SB1238)	1	AD	
Q21-22	VSKRA223M//-3	U	Transistor (KRA223M)	2	AB	
Q23	VSKRC243M//-3	U	Transistor (KRC243M)	1	AB	
Q24	VSKRA101M//-3	U	Transistor (KRA101M)	1	AA	
Q40	VSKRA101M//-3	U	Transistor (KRA101M)	1	AA	
R1-2	VRS-B13AA511J	U	Resistor 510 ohm 1W	2	AB	
R3-4	VRD-B12EF472J	U	Resistor 4.7k ohm 1/4W	2	AA	
R5	VRD-B12EF241J	U	Resistor 240 ohm 1/4W	1	AA	
R10	VRD-B12EF472J	U	Resistor 4.7k ohm 1/4W	1	AA	
R20	VRD-B12EF102J	U	Resistor 1.0k ohm 1/4W	1	AA	
R21	VRD-B12EF472J	U	Resistor 4.7k ohm 1/4W	1	AA	
R22	VRD-B12HA910J	U	Resistor 91 ohm 1/2W	1	AA	
R30	VRD-B12EF153J	U	Resistor 15k ohm 1/4W	1	AA	
R31	VRD-B12EF472J	U	Resistor 4.7k ohm 1/4W	1	AA	

PARTS LIST

Note: The parts marked "*" are used in voltage more than 250V. The parts marked Δ may cause undue microwave exposure
"§" MARK: SPARE PARTS-DELIVERY SECTION

REF NO.	PART NO.	§	DESCRIPTION	Q'TY	CODE
			CONTROL PANEL PARTS (CONTINUED)		
R32	VRD-B12EF103J	U	Resistor 10k ohm 1/4W	1	AA
R40	VRD-B12EF332J	U	Resistor 3.3k ohm 1/4W	1	AA
R50-51	VRD-B12EF472J	U	Resistor 4.7k ohm 1/4W	2	AA
R52-53	VRD-B12EF104J	U	Resistor 100k ohm 1/4W	2	AA
R61-62	VRD-B12EF472J	U	Resistor 4.7k ohm 1/4W	2	AA
RY1	RRLY-A080DRE0	U	Relay (OJ-SH-124LM)	1	AG
RY2	RRLY-A118DRE0	U	Relay (DU18D1-1PR(M))	1	AG
RY3	RRLY-A122DRE0	U	Relay (DU18D1-1P(M)-R-S)	1	AG
SP1	RALM-A014DRE0	U	Buzzer (PKM22EPT-THAI)	1	AG
SW50	RVR-BA018WRE0	U	Encoder	1	AH
T1	RTRNPA112DRE0	U	Transformer	1	AP
VRS1	RH-VZA034DRE0	U	Varistor (10G471K)	1	AD
ZD1	VHEHZ5C2///-1	U	Zener diode (HZ5C2)	1	AB
ZD2	VHEHZ4A2///-1	U	Zener diode (HZ4A2)	1	AB
ZD20	VHEHZ201///-1	U	Zener diode (HZ20-1)	1	AB
3- 2	FPWBFA053URK0	U	Key switch assy	1	BC
3- 3	HPNLCS035URT0	U	Control panel painted	1	AV
3- 4	GMADIA035URR0	U	Display window printed	1	AH
3- 5	JBTN-S009URT0	U	Select button painted	1	AE
3- 6	JKNBKS001URT0	U	Rotary knob painted	1	AH
3- 7	HDECQA009URR0	U	C/P decoration printed	1	AE
3- 8	XEPSD30P10XS0	U	Screw; 3mm x 10mm	8	AA
3- 9	DPNLCS048URK0	U	Control panel C/P assy A	1	AZ
			OVEN PARTS		
4-1	DOVN-A006URK1	U	Oven cavity	1	BE
4-2	LBNDKA111WRP0	U	Capacitor holder	1	AD
4-3	PHOK-A001URF1	U	Latch hook	1	AH
4-4	NFANJA029WRE0	U	Fan blade	1	AM
4-5	PDUC-A638WRF2	U	Fan duct	1	AE
4-6	LANGFA169WRP6	U	Chassis support	1	AE
4-7	PPACGA002URE0	U	Seal packing	1	AB
4-8	PCUSUA340WRP2	U	Separate cushion A	1	AA
4-9	PCOVPA309WRE0	U	Waveguide cover	1	AC
4-10	PDUC-A581WRF3	U	Air intake duct	1	AE
4-11	GDAI-A280WRP1	U	Base plate	1	AQ
4-12	PSPAGA001WRE0	U	Vibration Proof Cushion	1	AA
			DOOR PARTS		
5	CDORFS016URK0	U	Door assembly (SUS)	1	BG
5-1	FDORFA299WRT1	U	Door panel assembly	1	AU
5-2	FWAKPS017URK0	U	Door frame assy	1	BE
5-3	GWAKPR013URF0	U	Door frame painted	1	AM
5-4	PGLSPA013URE0	U	Outer door glass	1	AM
5-5	LSTPPA013URF0	U	Latch head	1	AD
5-6	MSPRTA141WRE0	U	Latch spring	1	AA
5-7	PSHEPA482WRE0	U	Inner Sealer film	1	AH
5-8	LSTPPA020URF1	U	Glass stopper	1	AB
5-9	XEBSD30P06000	U	Door Frame screw	4	AA
5-10	JHNDPS002URT0	U	Handle painted	1	AW
5-11	XEPSD30P10XS0	U	Handle/glass stopper screw	2	AA
5-12	HDECQS002URP0	U	Door decoration (SUS)	1	AR
5-13	GCOVHA366WRF0	U	Choke cover	1	AG

PARTS LIST

Note: The parts marked "*" are used in voltage more than 250V. The parts marked Δ may cause undue microwave exposure
"§" MARK: SPARE PARTS-DELIVERY SECTION

REF NO.	PART NO.	§	DESCRIPTION	Q'TY	CODE
			GRILL PARTS		
6-1	PDUC-A580WRP1	U	Exhaust duct	1	AK
6-2	LANG-A052WRP0	U	Exhaust duct angle	1	AD
6-3	PREFHA054WRP2	U	Grill reflector	1	AQ
6-4	LANG-A053WRP0	U	Grill heater angle	1	AG
6-5	RHET-A159WRE2	U	Grill heater (112.5V)	2	BB
6-6	QTANNA006WRE0	U	Earth plate	1	AB
6-7	XBPWW30P05K00	U	M/C screw	2	AA
6-8	PCUSUA430WRP0	U	Exhaust duct cushion	1	AA
6-9	PCUSUA419WRP0	U	Cushion	1	AA
6-10	PDUC-A579WRP4	U	Air duct	1	AL
6-11	LANG-A051WRP0	U	Air duct angle	1	AG
			SCREWS,NUTS AND WASHERS		
7-1	LX-CZA001URE0	U	Screw 4mm x 12mm	21	AA
7-2	XHTSD40P08RV0	U	Screw 4mm x 8mm	4	AA
7-3	LX-LZA011WRE0	U	Rivet	1	AB
7-4	LX-NZA026WRE0	U	M4 Nyloc nut	1	AA
7-5	XHPSD40P06000	U	TTM screw	2	AA
7-6	LX-HZA001URE0	U	Special screw	2	AA
7-7	XOTSE40P10000	U	Screw: 4mm x 12mm	2	AA
7-9	XHPSD40P08K00	U	Screw: 4mm x 8mm	1	AA
7-10	XJPSD40P10X00	U	Screw connection	1	AA
7-11	LX-CZA030WRE0	U	Special screw	1	AA
			MISCELLANEOUS		
8-1	FROLPA070WRK3	U	Roller stay	1	AM
8-2	NTNT-A060WRE0	U	Turntable	1	AN
8-3	FAMI-A081WRM1	U	Trivet	1	AR
8-5	QW-QZA001URE0	U	H.V. wire B	1	AE *
8-6	FW-VZA067URE5	U	Main harness	1	AR
8-7	FW-VZA061URE1	U	Stop switch harness	1	AE
8-8	TINS-A248URRO	U	Instruction manual/cook book	1	AY
8-9	LHLDKA008WRF1	U	P-clip	1	AA
8-10	PSHEPA013URE0	U	Sealer film B	1	AD
8-11	PCLI-A009URE0	U	Harness clip	1	AA

HOW TO ORDER REPLACEMENT PARTS

To have your order filled promptly and correctly, please furnish the following information.

1. MODEL NUMBER 2. REF. NO. 3. PART NO. 4. DESCRIPTION

EXPLODED DIAGRAM OF OVEN PARTS

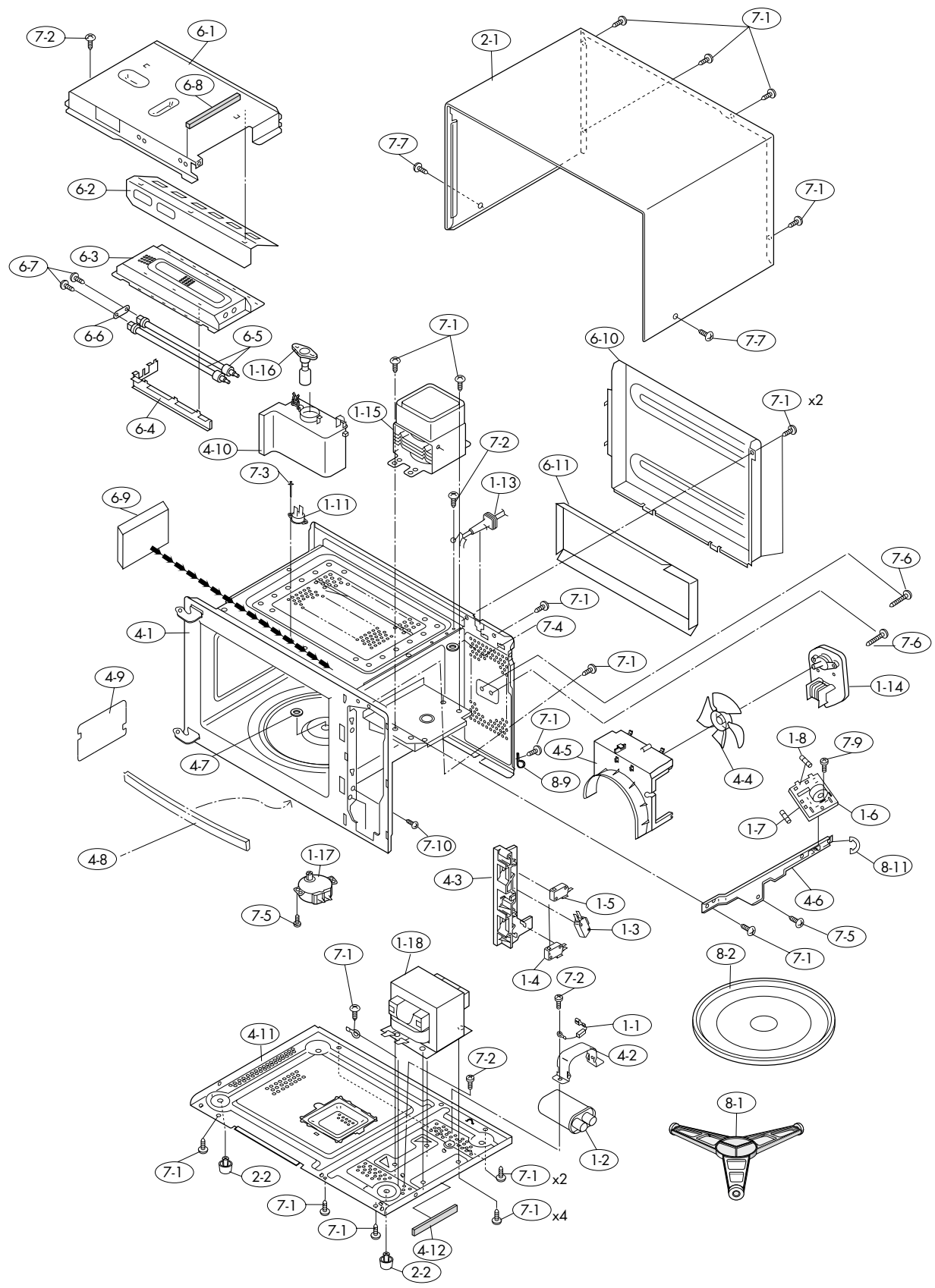

NOTE: In the event of removing the turntable motor cover this part should be refitted using screw connection: LX-CZA030WRE0 (7-11)

CONTROL PANEL PARTS AND DOOR PARTS

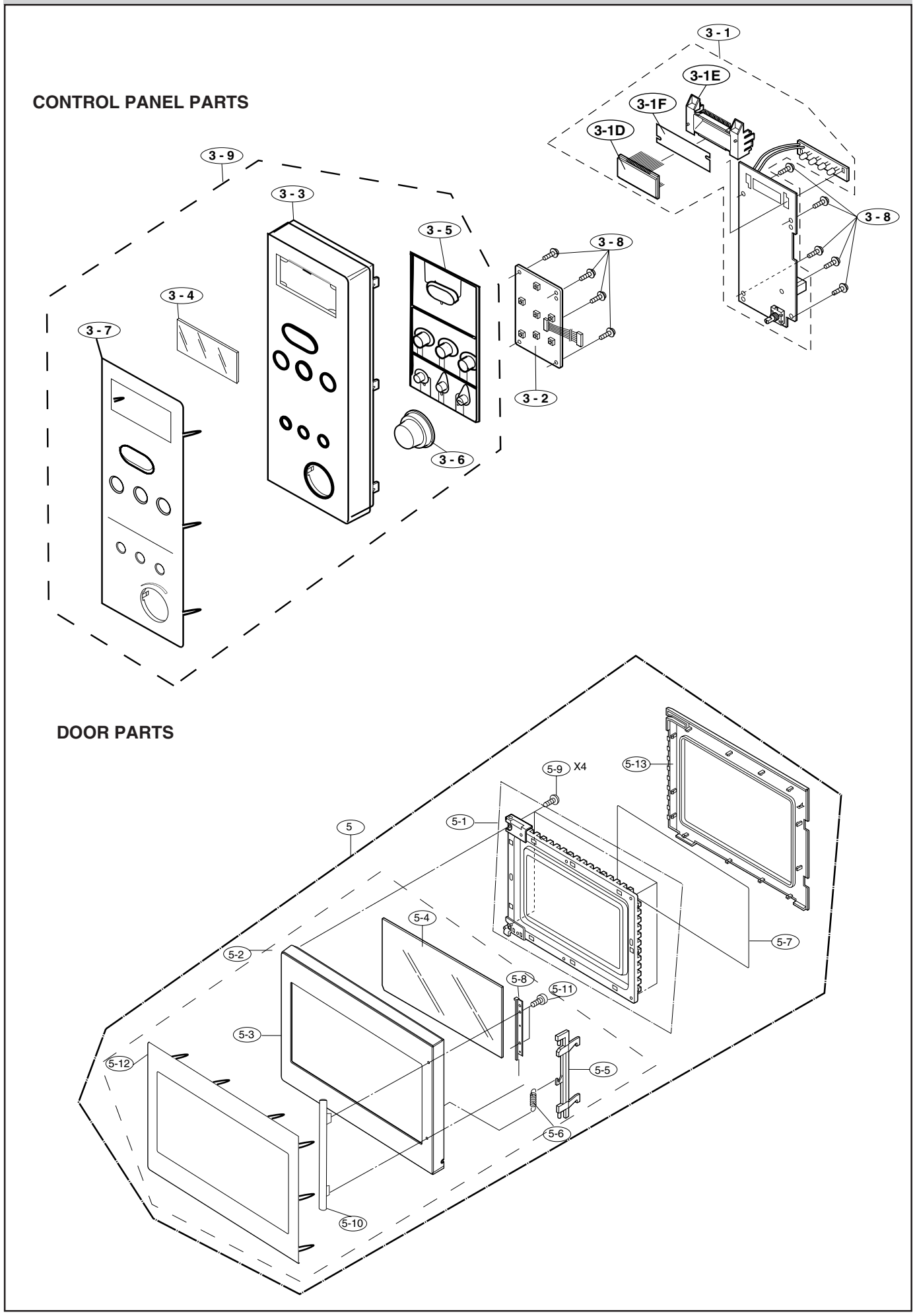

MISCELLANEOUS/PACKING & ACCESSORIES

MISCELLANEOUS

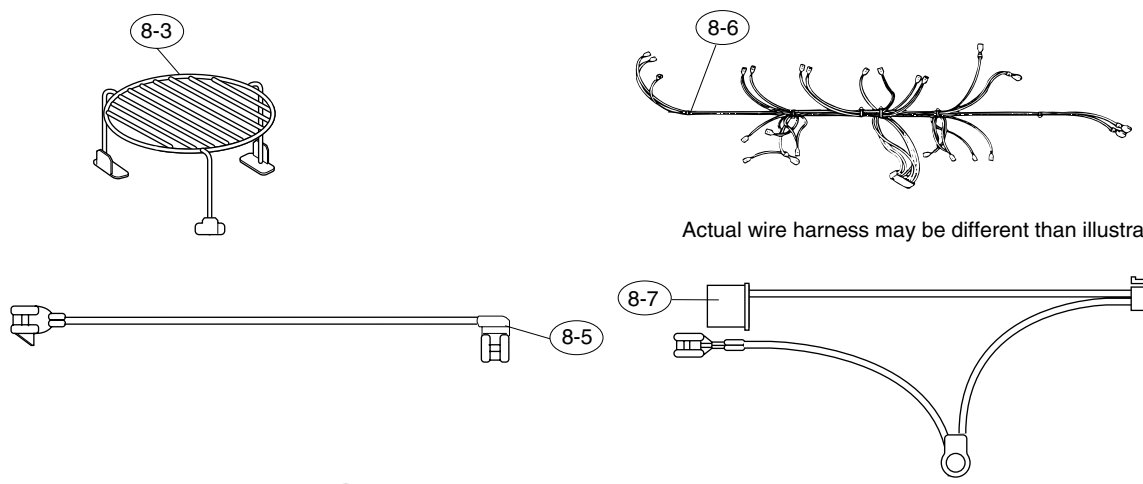

SHARP®

PACKING AND ACCESSORIES

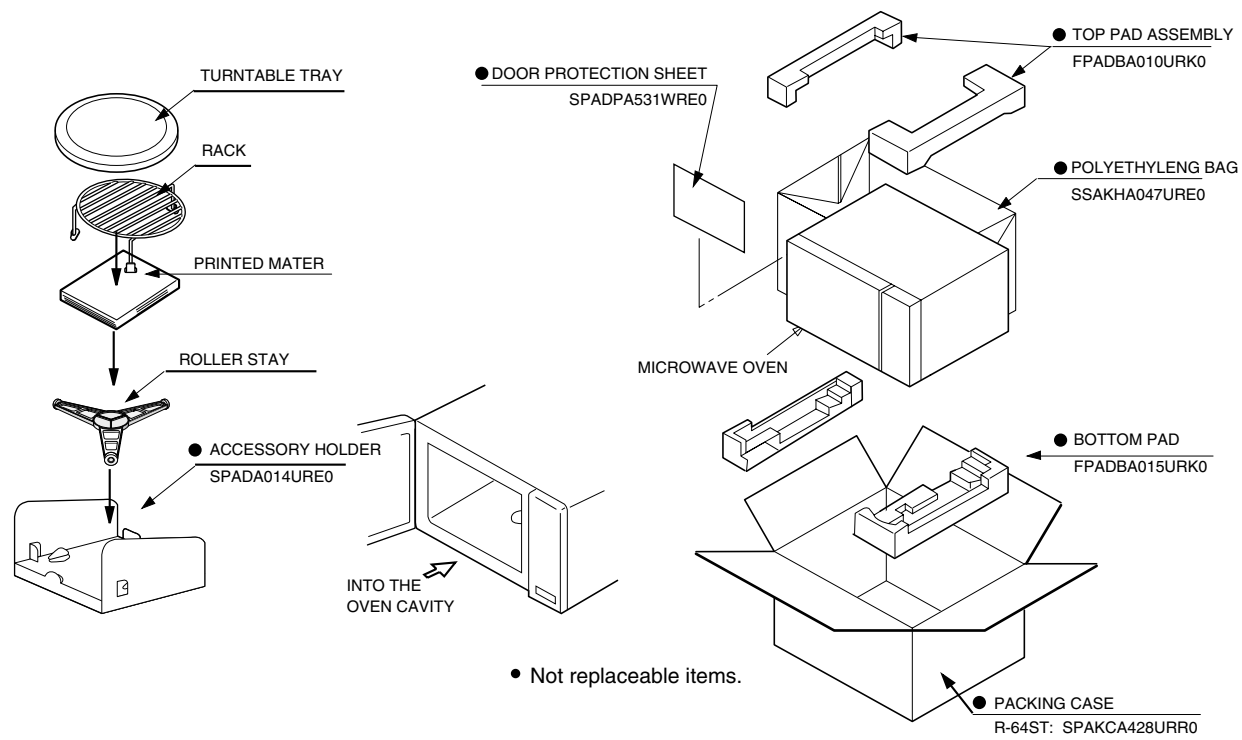

• Not replaceable items.

SHARP COPORATION
2001Printed in U.K.