OVEN PARTS

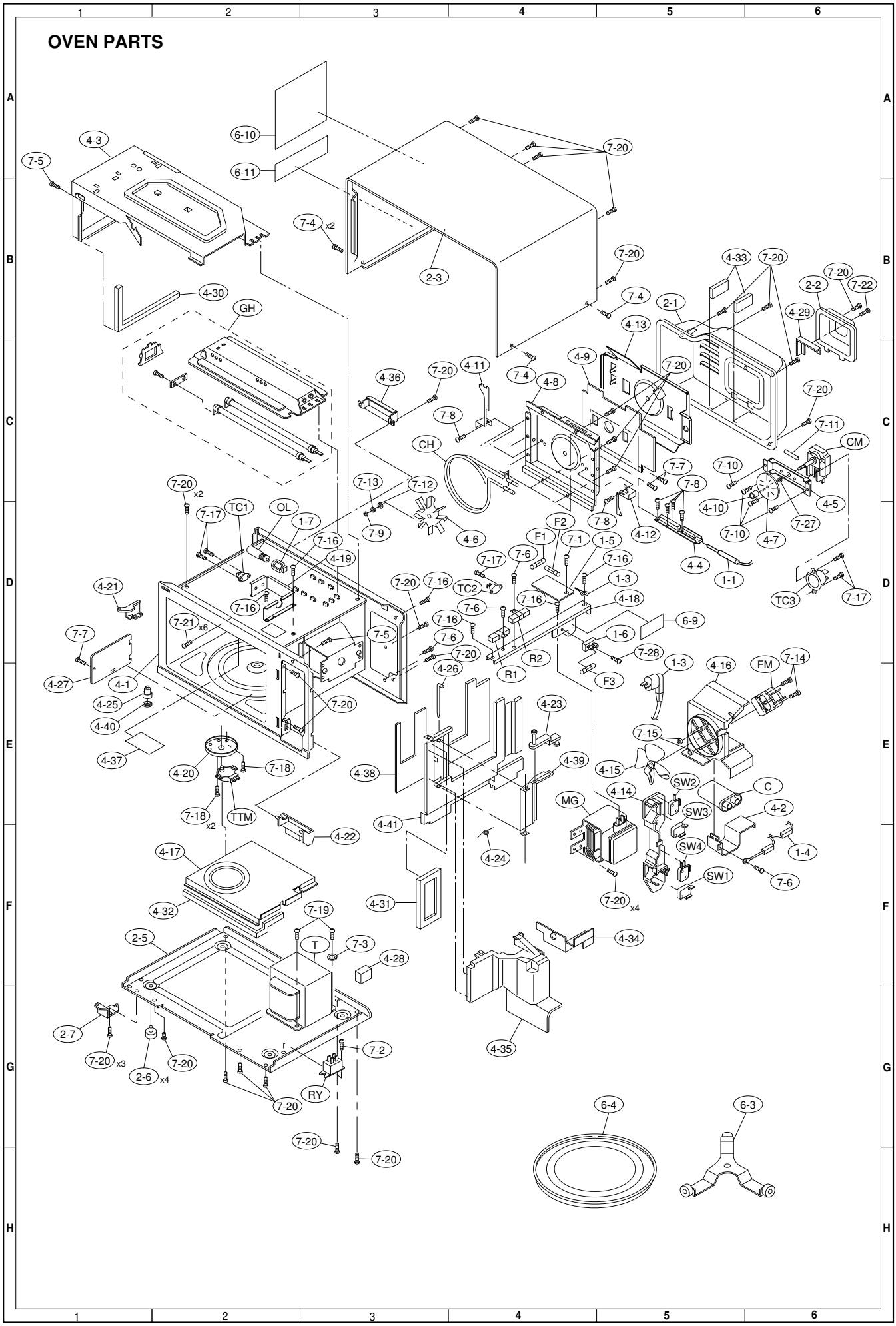
4-3
7-5
6-10
6-11
7-20
7-4 x2
2-3
4-30
GH
4-33
2-2
7-22
4-29
2-1
4-13
4-9
4-36
4-11
4-8
CH
7-8
7-11
CM
7-10
4-5
7-27
4-7
4-12
4-4
1-1
TC3
7-17
7-20 x2
TC1
OL
1-7
7-13
7-12
7-9
4-6
F2
F1
7-1
1-5
7-16
4-19
7-6
1-3
4-18
6-9
4-21
7-21 x6
7-7
4-27
4-1
4-25
4-40
4-37
TC2
R2
R1
1-6
7-28
F3
4-26
4-16
FM
7-14
4-23
7-15
4-39
4-15
SW2
C
4-14
SW3
4-2
MG
SW4
1-4
SW1
7-20 x4
4-20
7-18
4-38
7-18 x2
TTM
4-22
4-41
4-24
4-17
4-32
4-31
4-34
2-5
T
7-3
4-28
2-7
7-20 x3
2-6 x4
7-2
RY
4-35
6-4
6-3

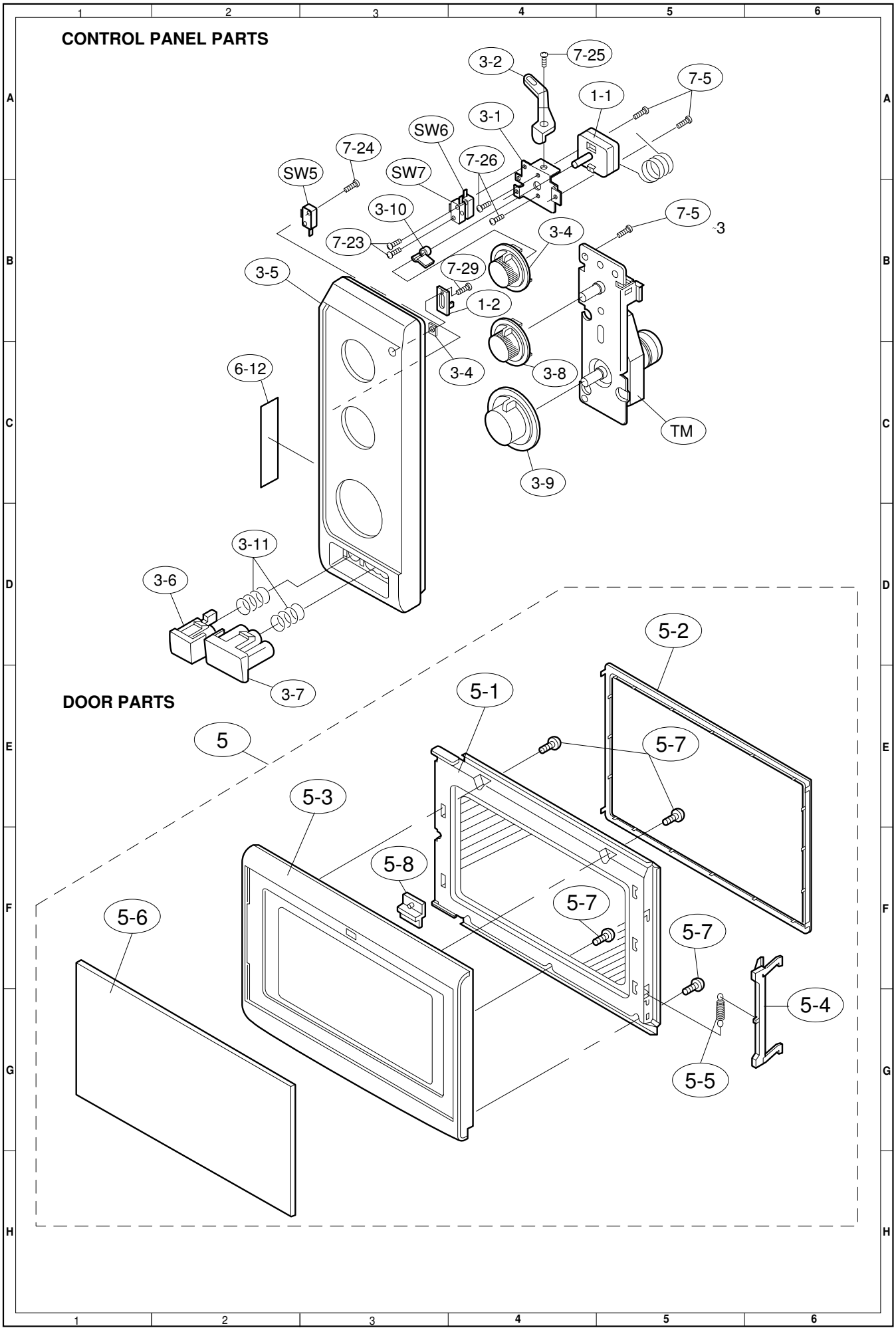
CONTROL PANEL PARTS
3-2
7-25
7-5
1-1
3-1
SW6
7-24
7-26
SW5
SW7
3-10
7-5
3
7-23
3-4
3-5
7-29
1-2
6-12
3-4
3-8
TM
3-9
3-11
3-6
3-7
DOOR PARTS
5-2
5-1
5
5-7
5-3
5-8
5-7
5-6
5-7
5-4
5-5