DOOR PARTS

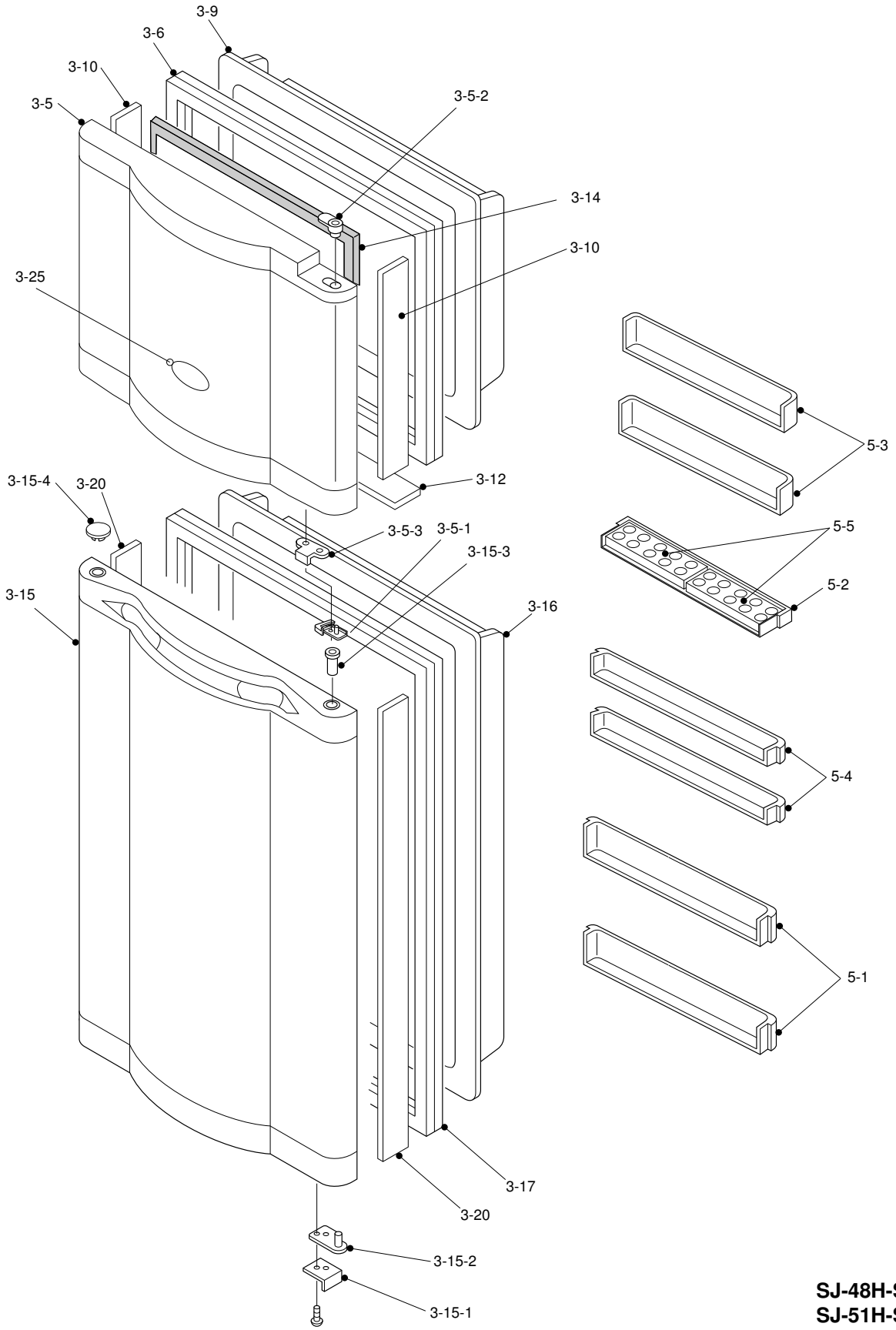

SJ-48H-S
SJ-51H-S
SJ-55H-S
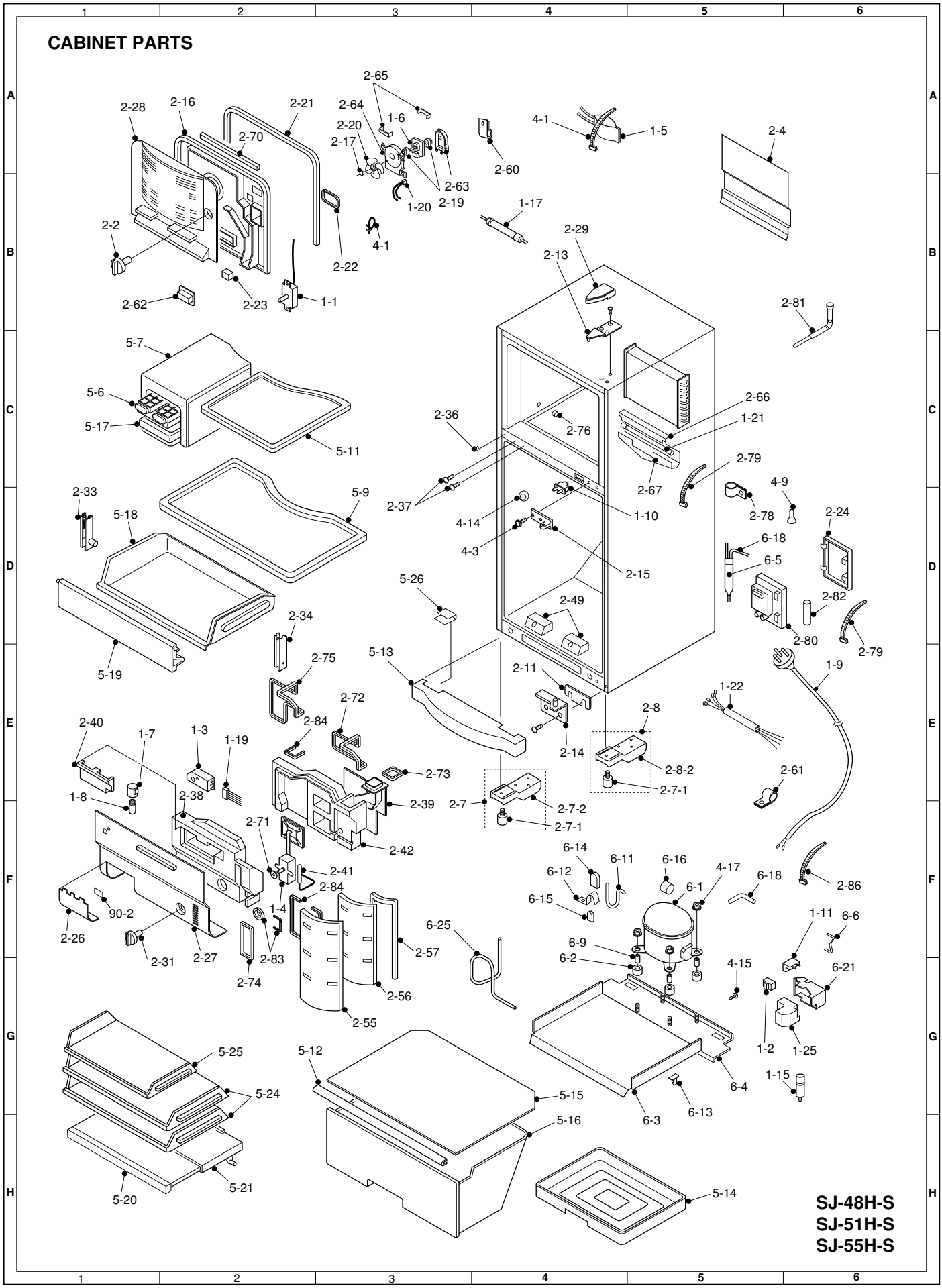
CABINET PARTS