[4] SJ-PD591S ATTACHMENT PARTS

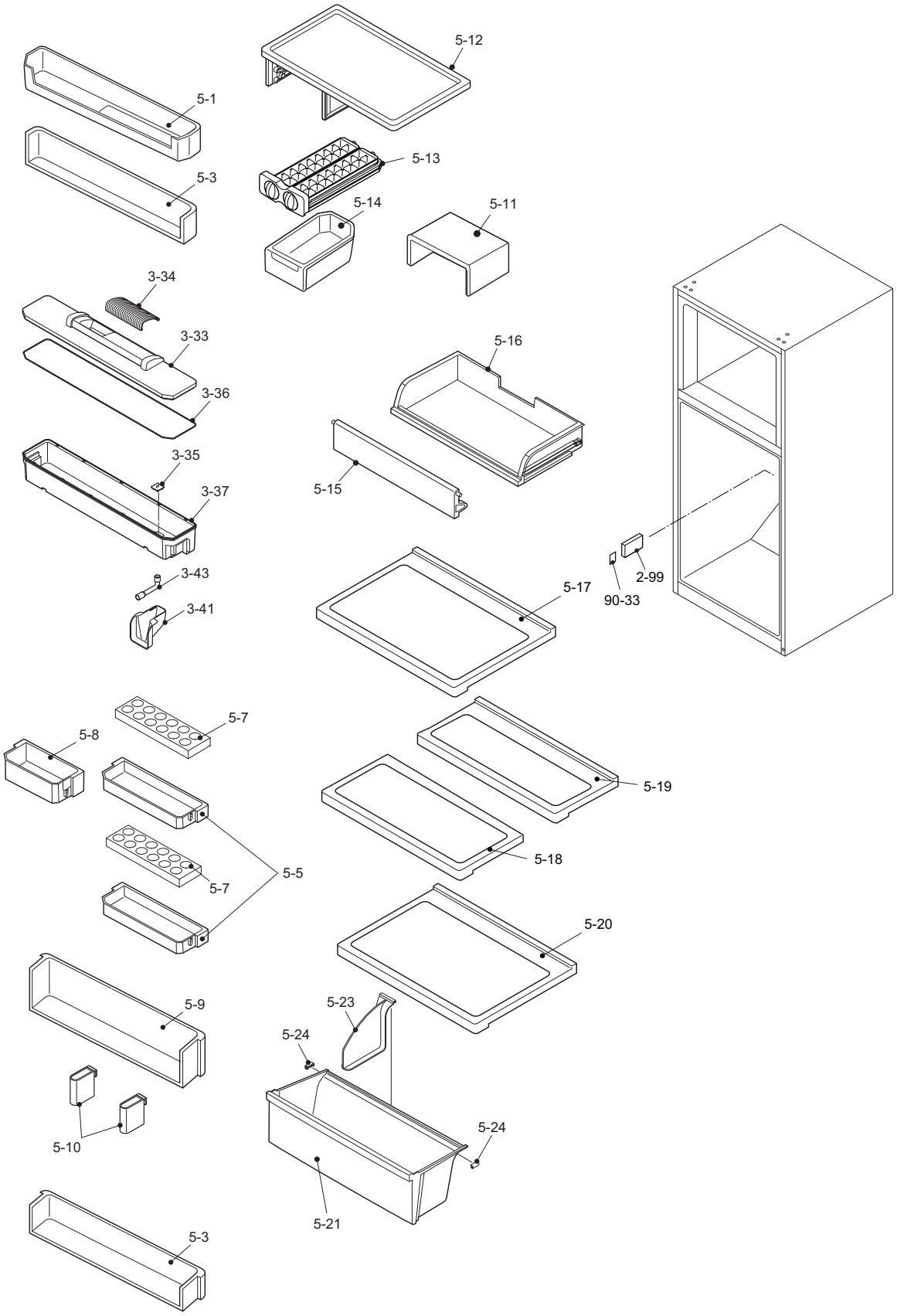

[3] SJ-PD591S DOOR PARTS

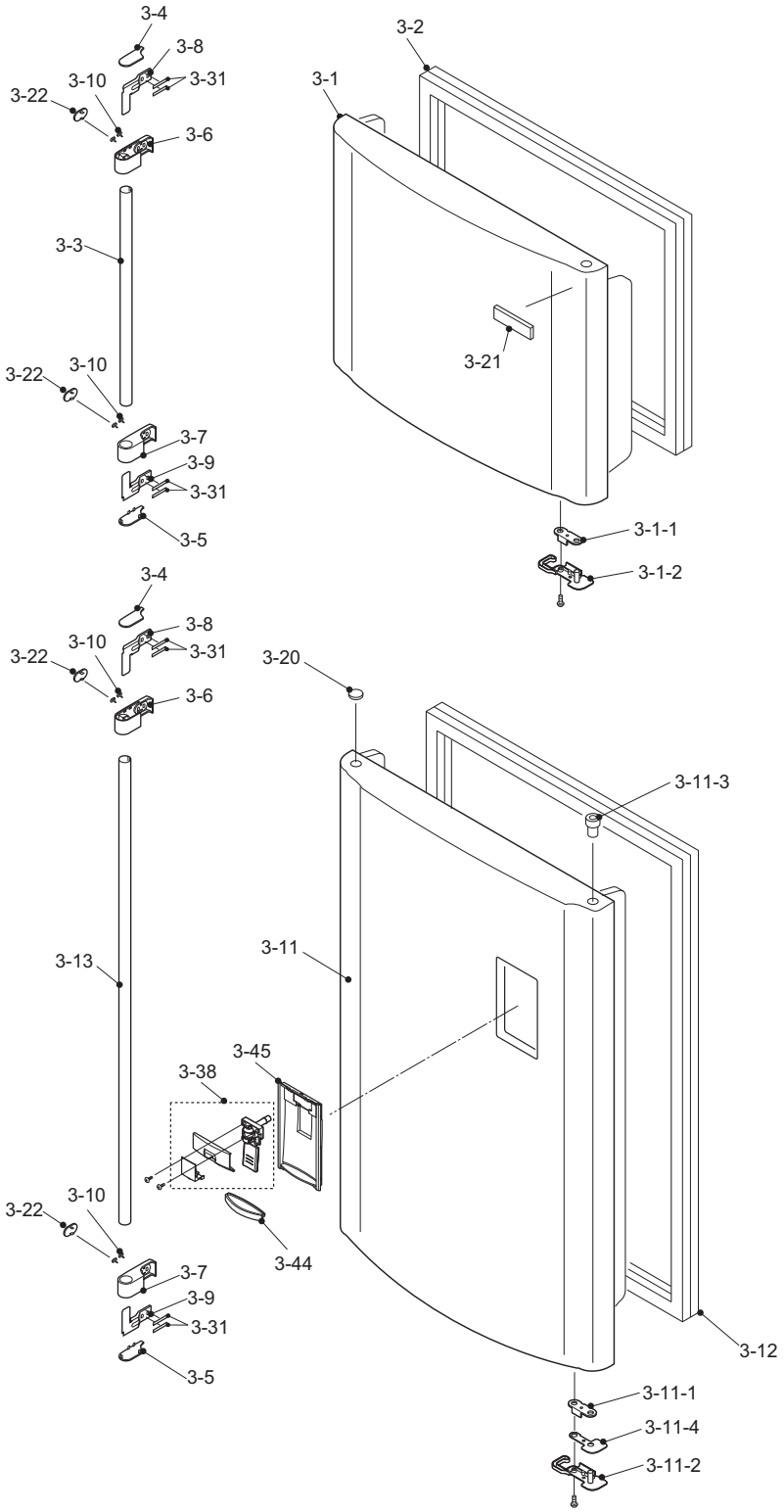

[2] SJ-PD591S MECHANICAL PARTS

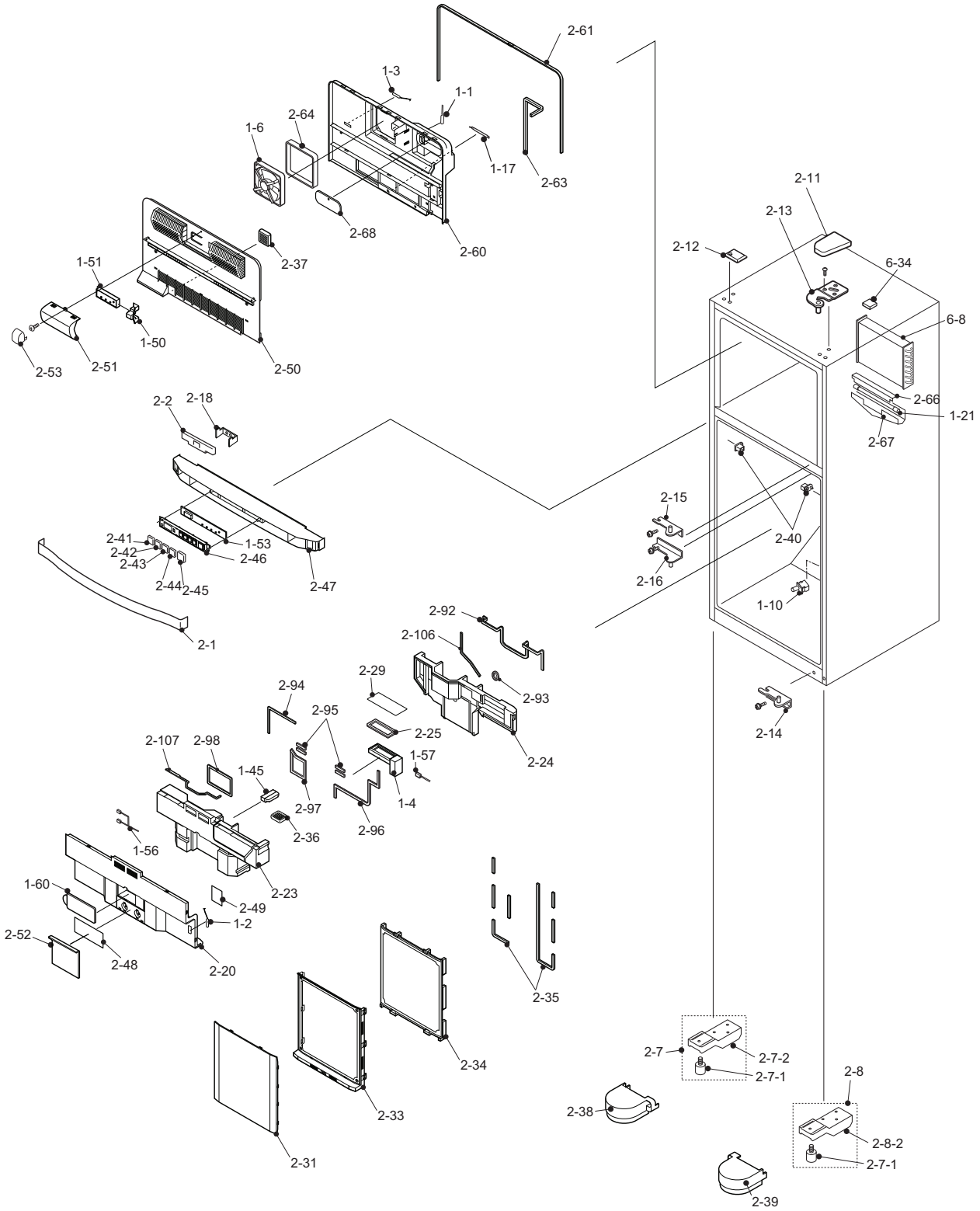

[1] SJ-PD591S CYCLE PARTS

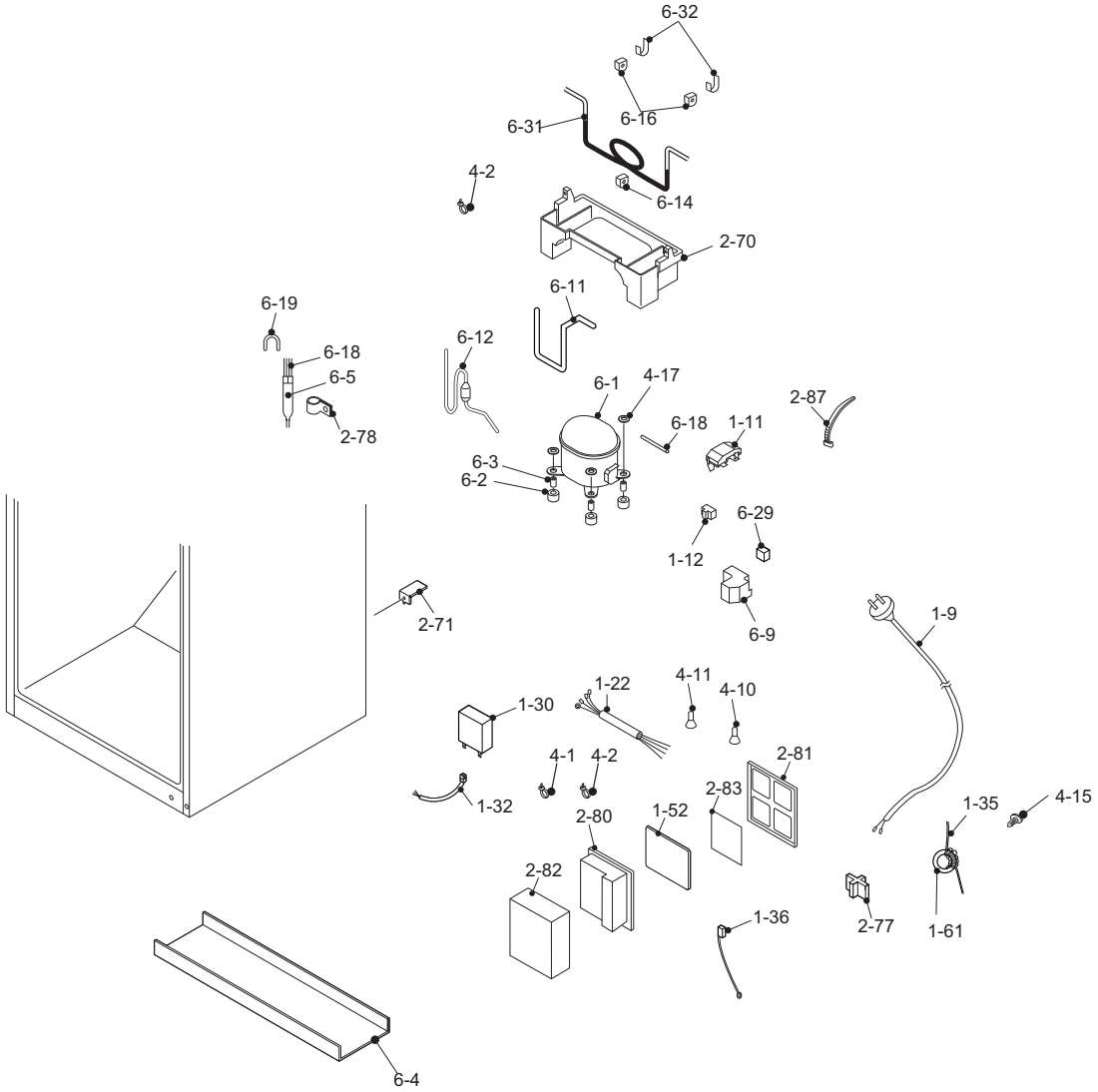

NO.	PARTS CODE	PRICE RANK	NEW MARK	PART RANK	DESCRIPTION
[1] SJ-PD591S CYCLE PARTS					
1-9	QACC-A192CBZZ	AU			Source cord
1-11	RHOG-A189CBEZ	AZ			Protector
1-12	RSTT-A179CBZZ	AR			Ptc relay
1-22	FCNW-B019CBKZ	AT			Relay cord s ass'y
1-30	RC-EZA254CBZZ	AS			Running capacitor
1-32	QCNW-B021CBZZ	AC			Reray wire rc
1-35	QCNW-B294CBZZ	AG			Emi earth wire cr
1-36	QCNW-B283CBZZ	AG			Pwb earth wire
1-52	FPWB-A639CBKZ	BQ			Main pwb ass'y
1-61	RCiLFA011CBZZ	AV			Emi core esd-r-38
2-70	USRA-A318CBFA	AP			Drain pan
2-71	LHLD-A797CBFZ	AE			Ev.pan holder
2-77	LHLD-A359CBFA	AE			T-box holder
2-78	LPLTMA399CBP0	AD			Dryer support
2-80	PBOX-A164CBFA	AM			Terminal box
2-81	PCOV-A396CBPZ	AF			Terminal cover
2-82	PCOVMA005CBYZ	AF			Terminal box cover
2-83	PSHEPA084CBZZ	AG			Terminal sheet
2-87	LBND-A018CBE0	AP			Fastening band a
4-1	LBND-A023CBE0	AC			L-band c
4-2	LBND-A019CBE0	AB			Nylon band
4-10	QTAN-A013CBE0	AH			Solderless term. A
4-11	QTAN-A012CBE0	AH			Solderless term. B
4-15	LX-BZA090CBZZ	AC			Special screw