CABINET AND MECHANICAL PARTS

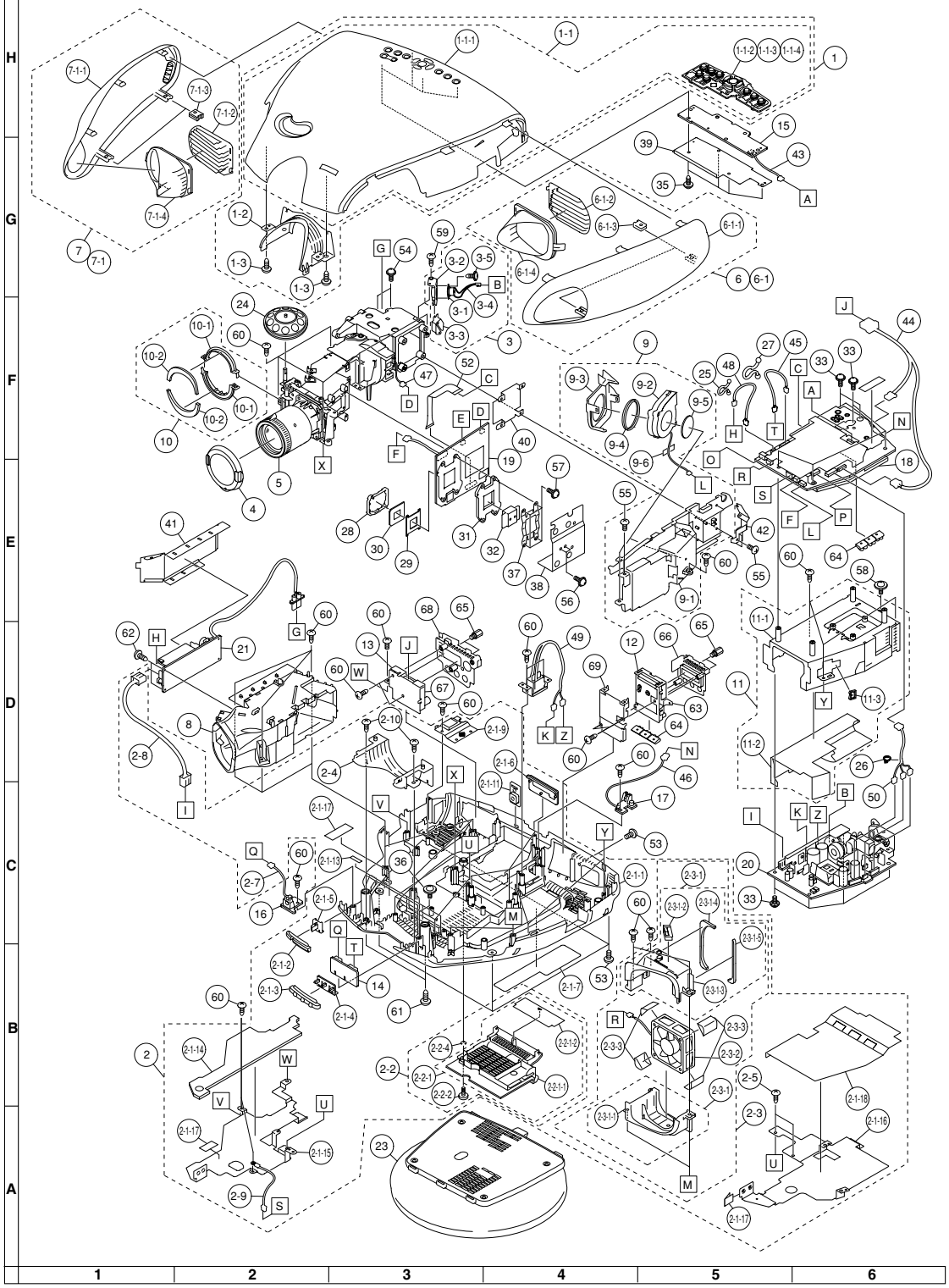

OPTICS MECHANISM PARTS

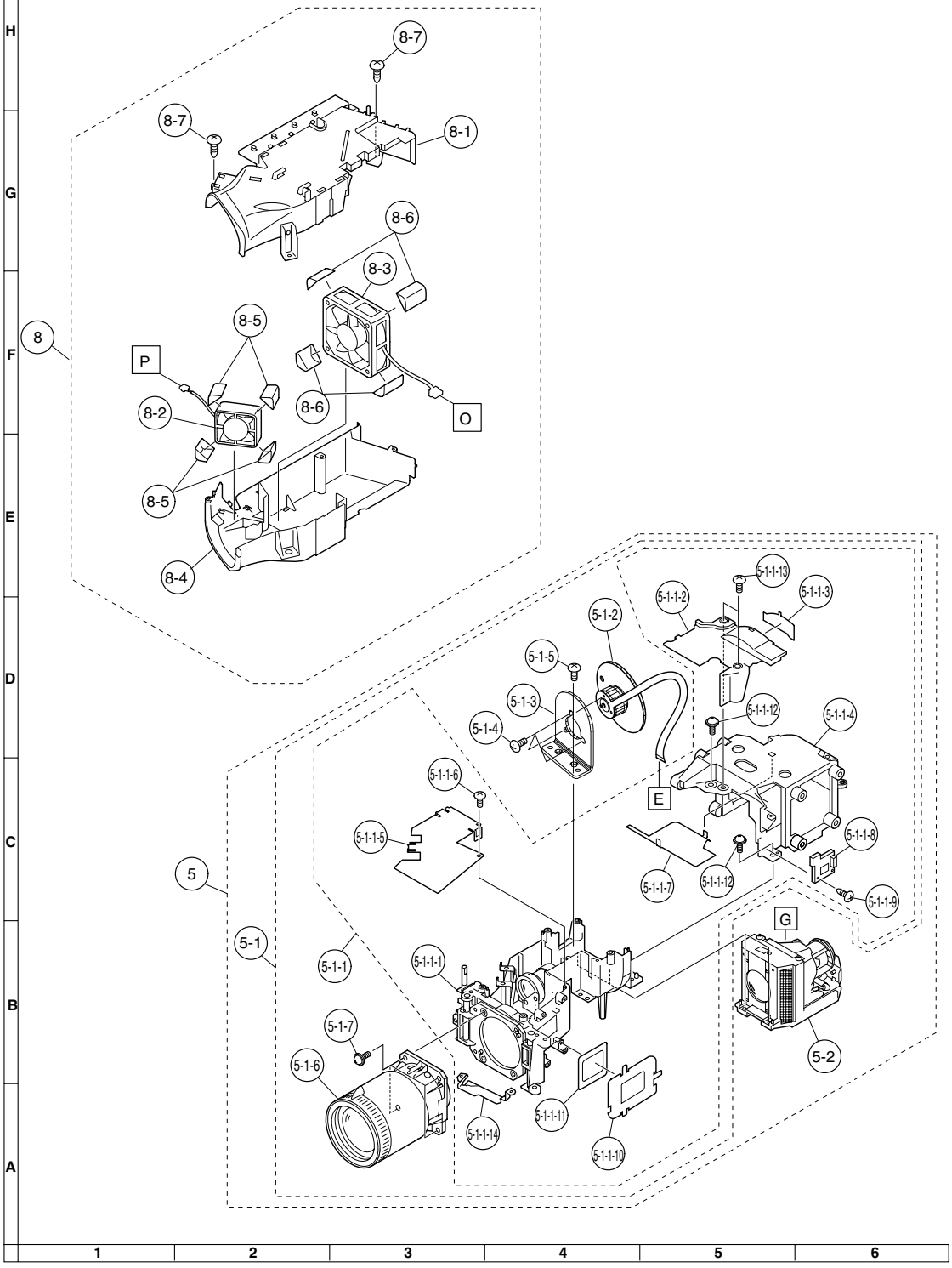

PACKING OF THE SET / VERPACKEN DES GERÄTS

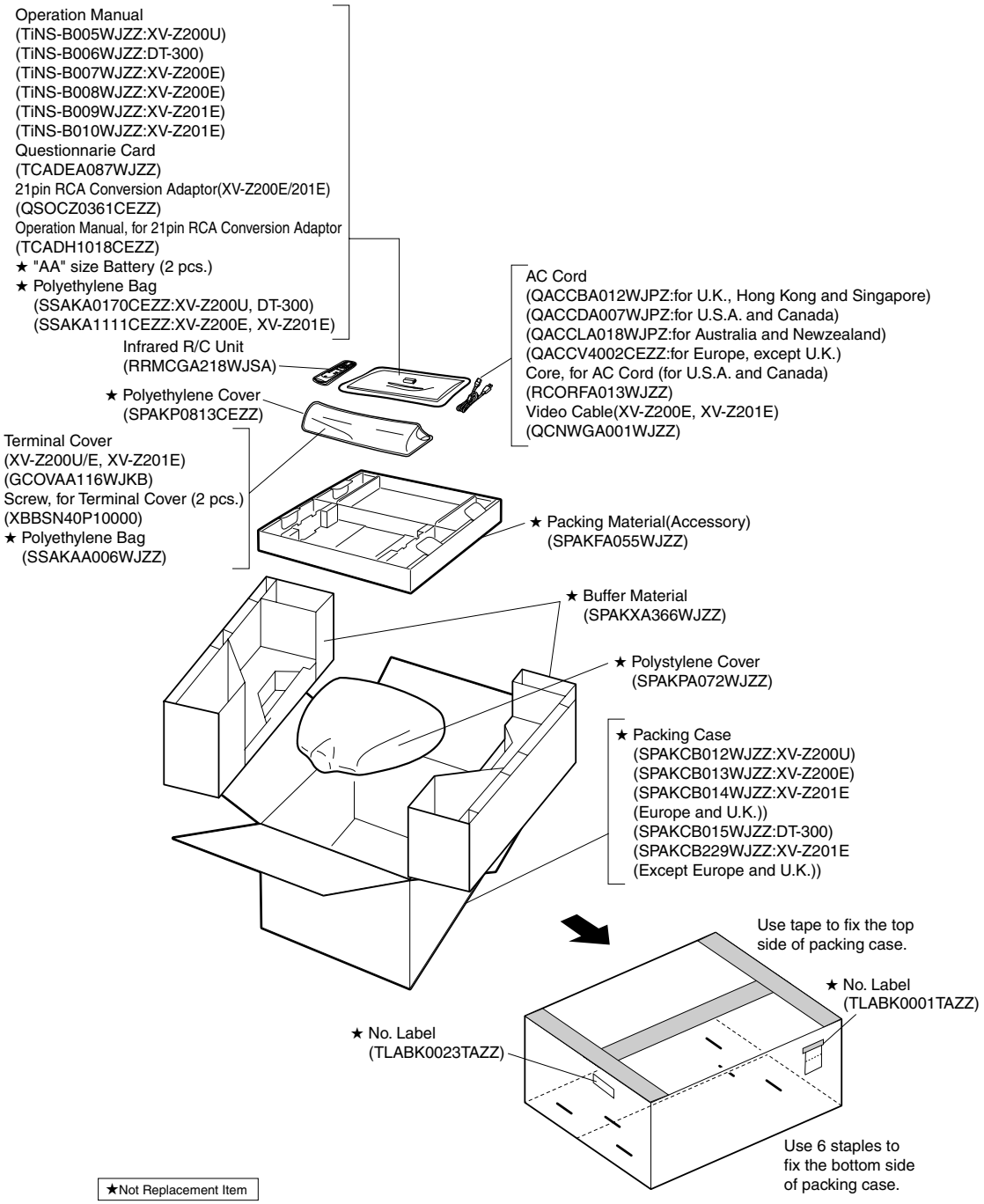

★Not Replacement Item