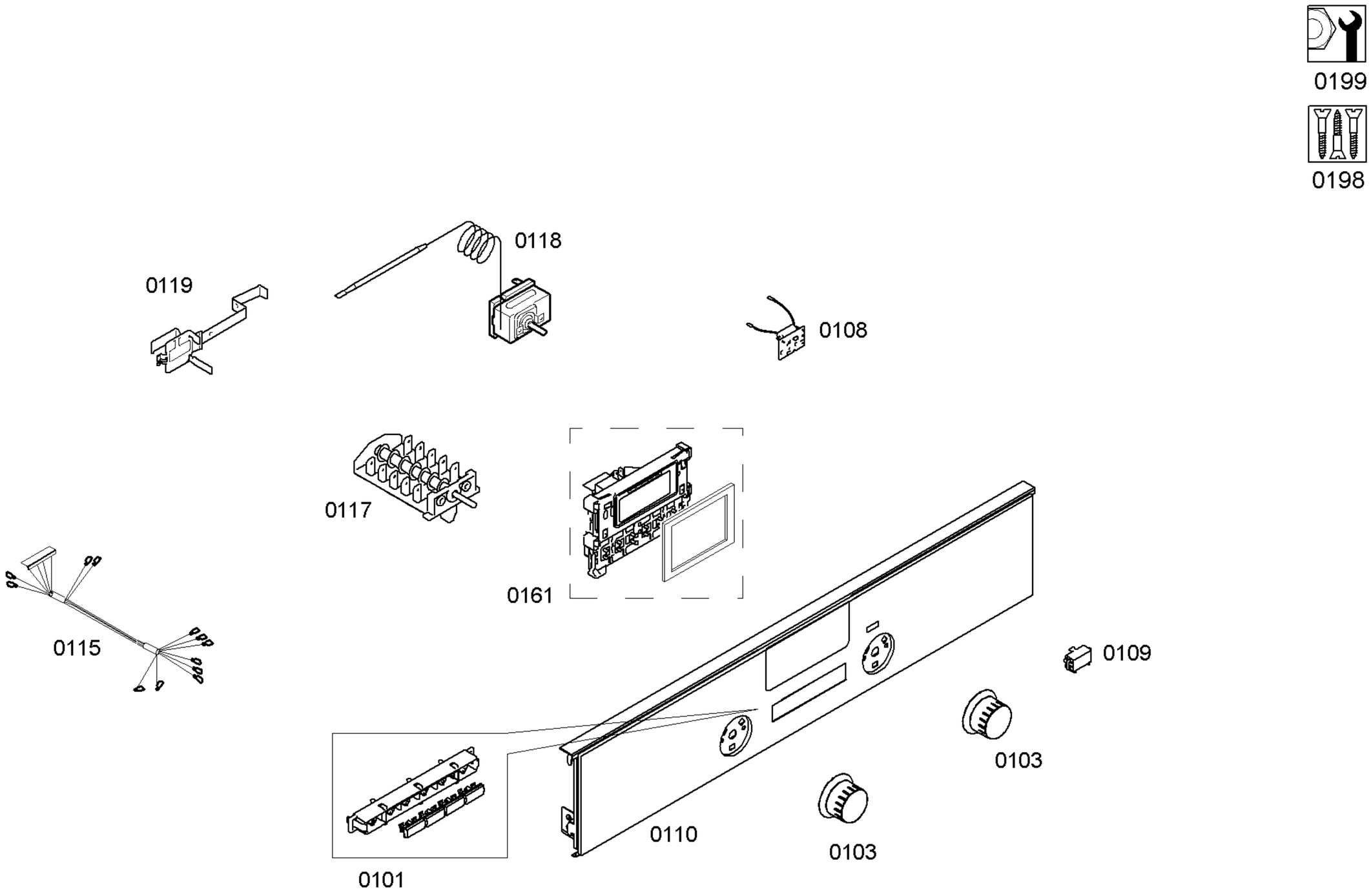

Copyright © (2012) by Siemens / 205502

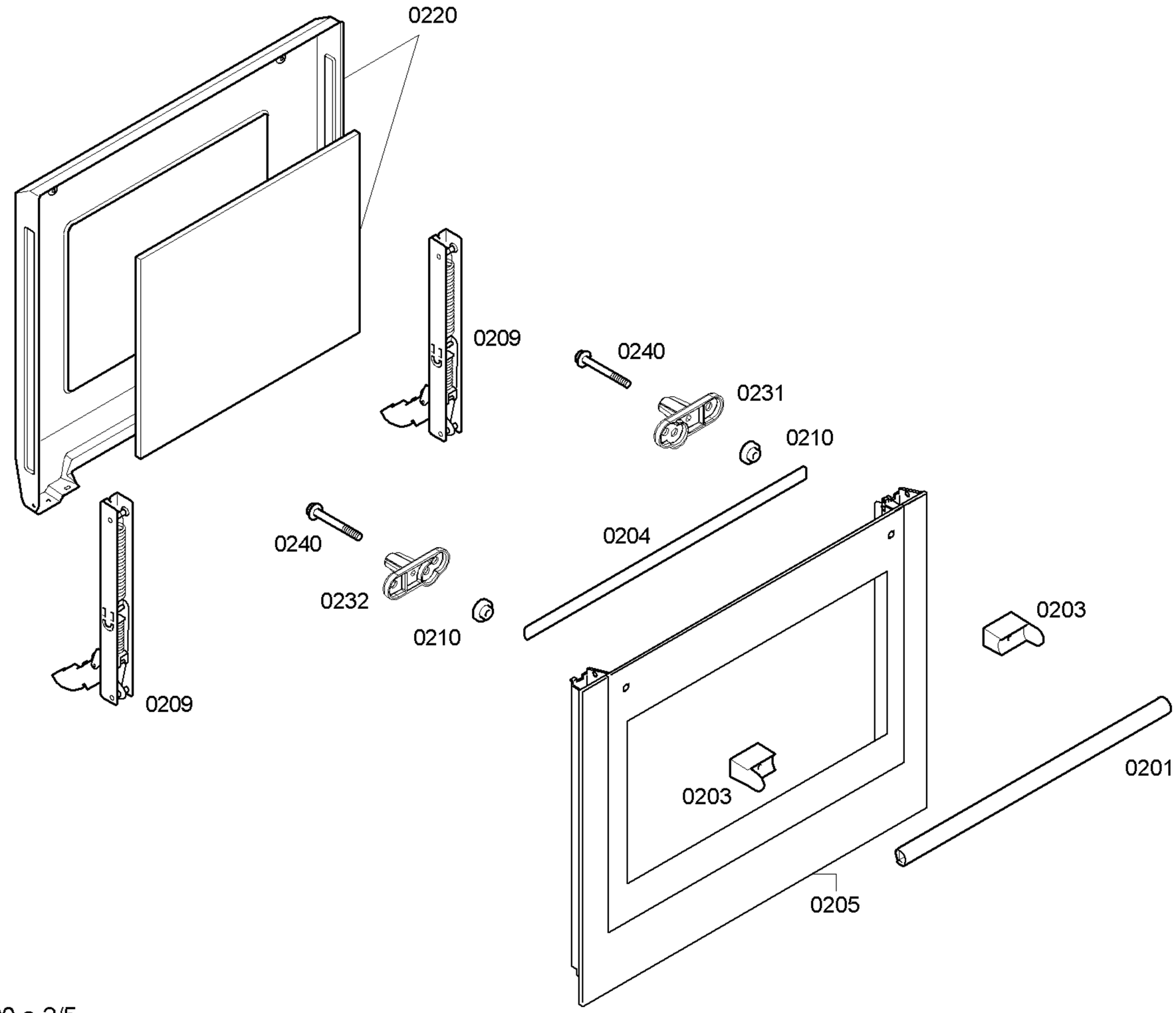

Copyright © (2012) by Siemens / 205502

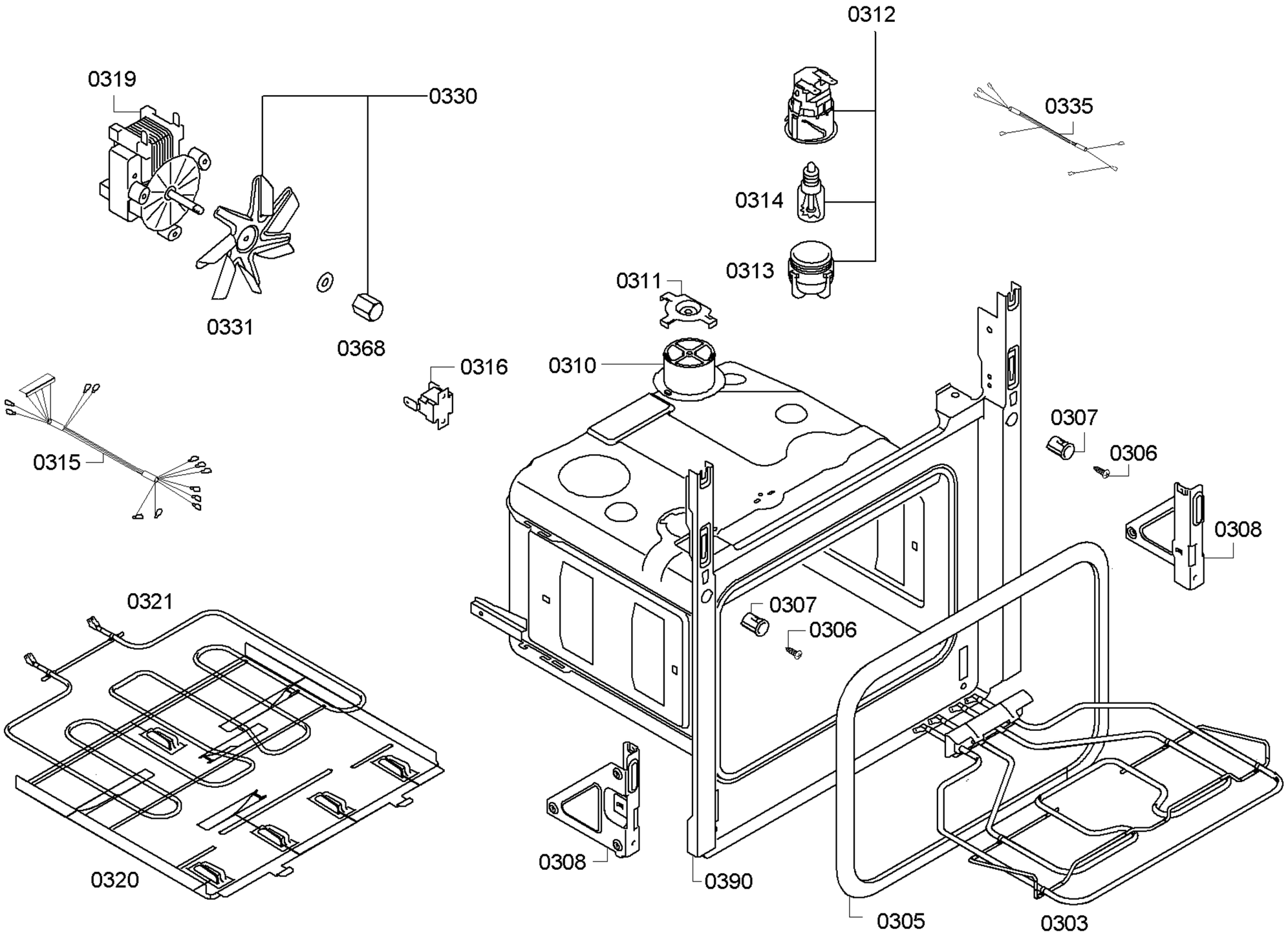

Copyright © (2012) by Siemens / 205502

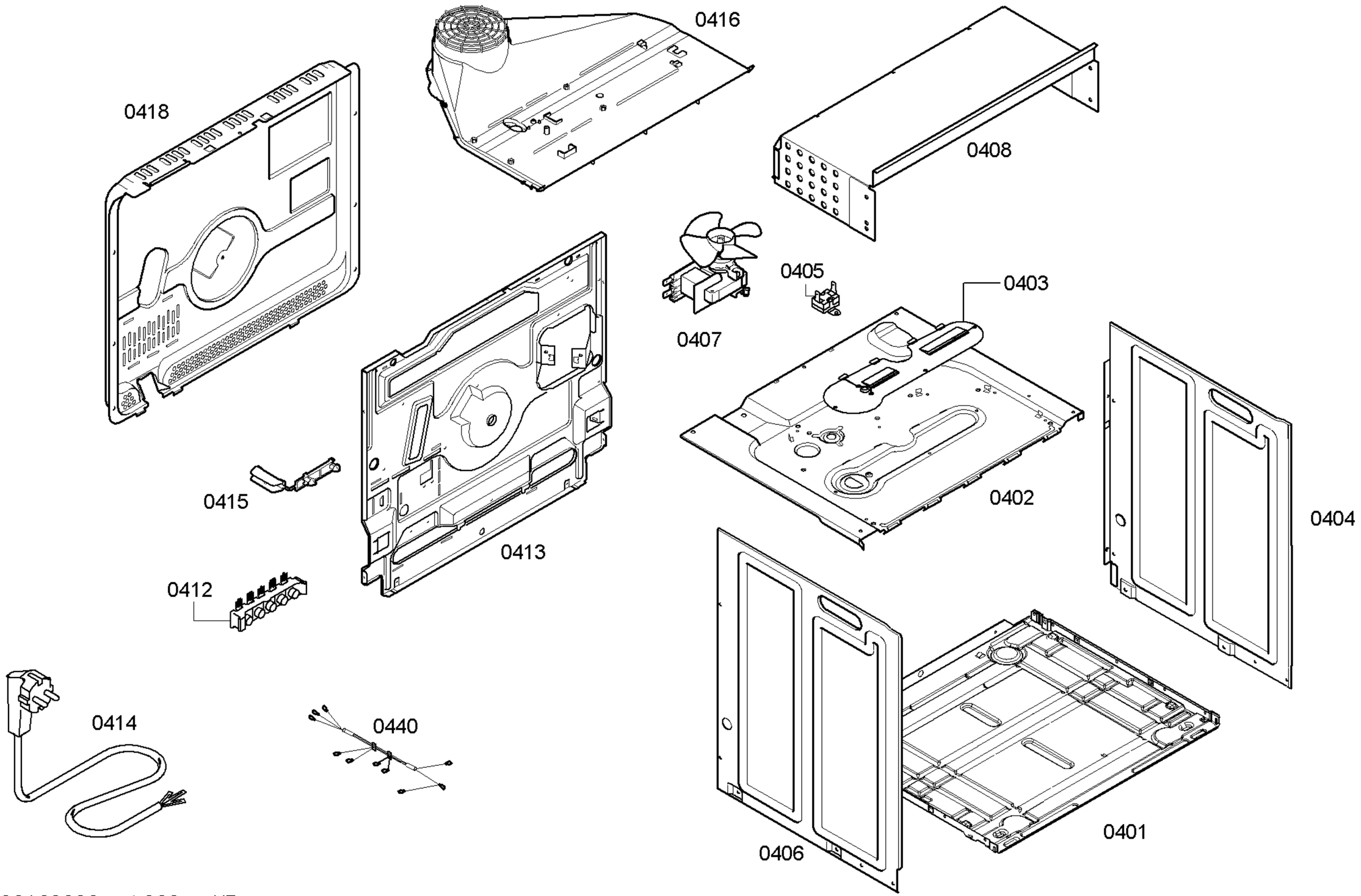

Copyright © (2012) by Siemens / 205502

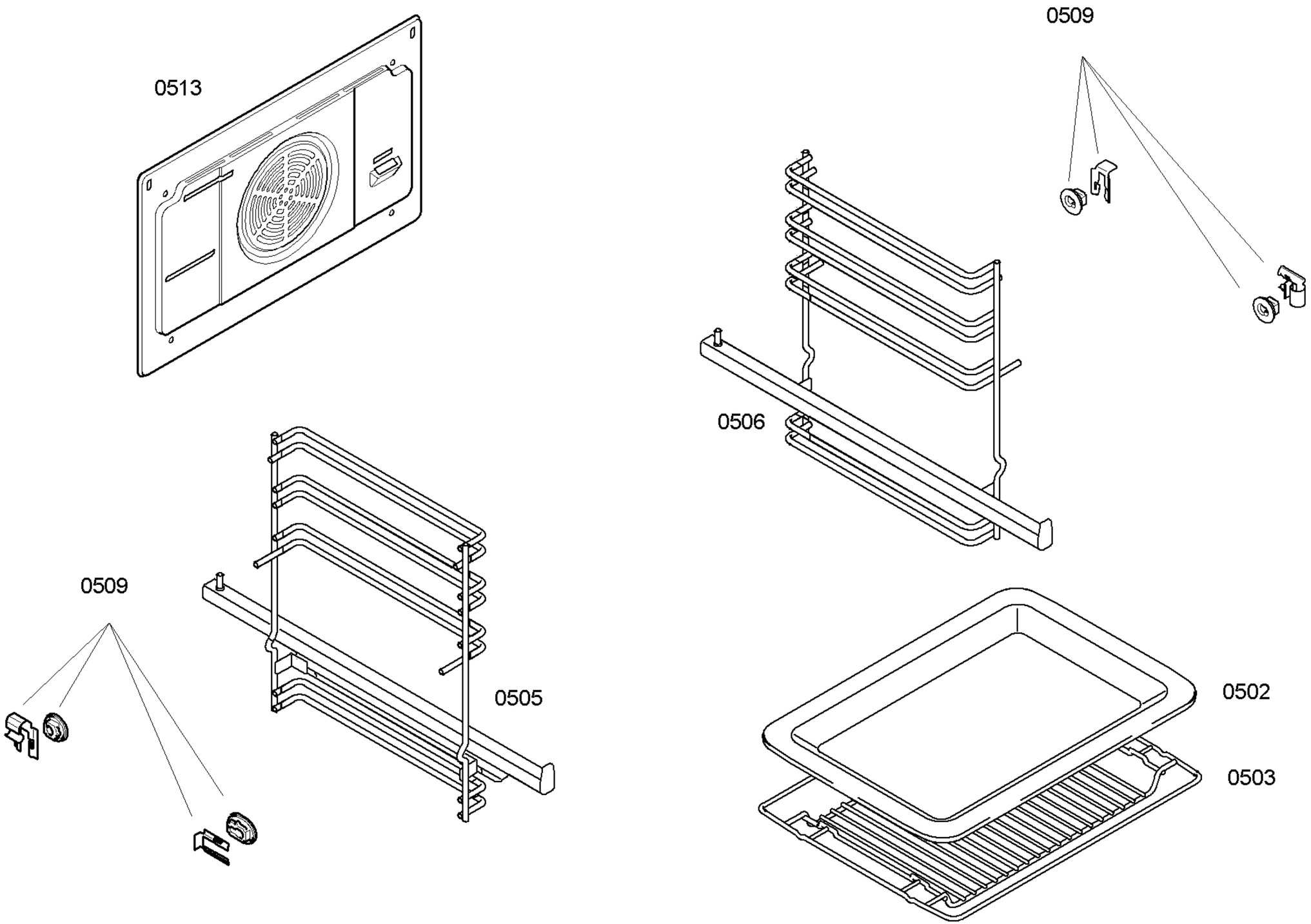

Copyright © (2012) by Siemens / 205502