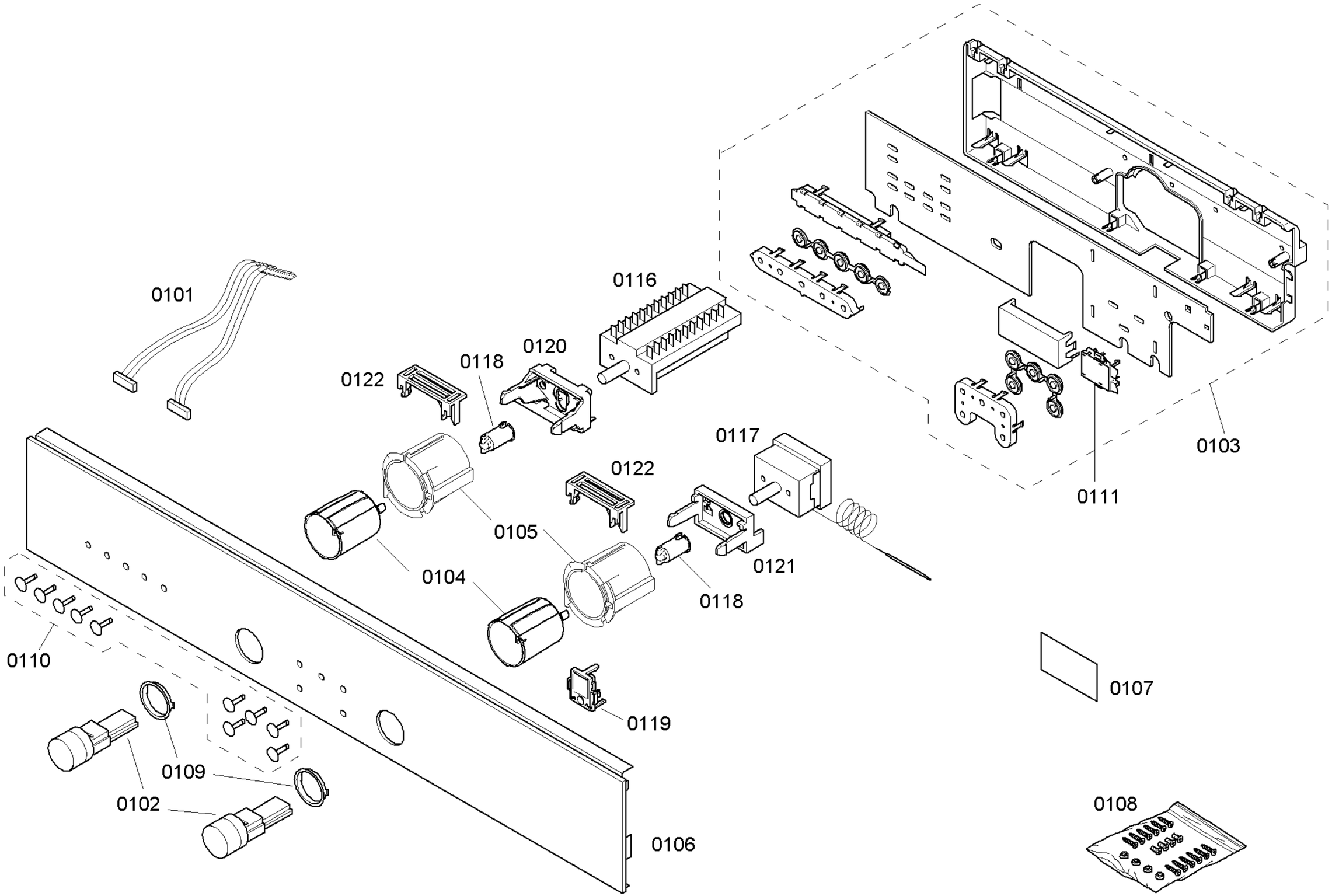

58300000108482 aet 000 c 1/6

Copyright © (2009) by Siemens / ESHOP_7_2

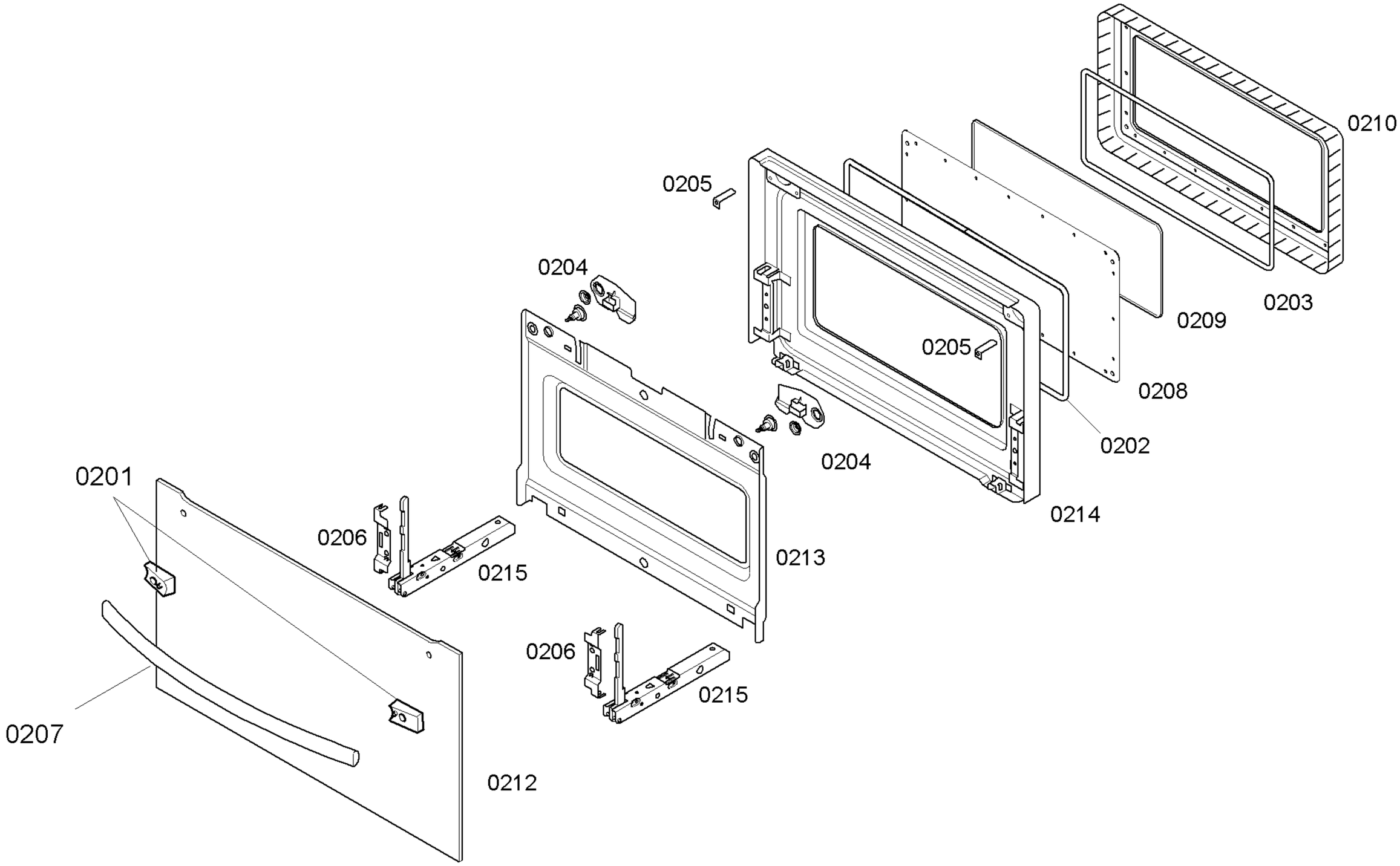

Copyright © (2009) by Siemens / ESHOP_7_2

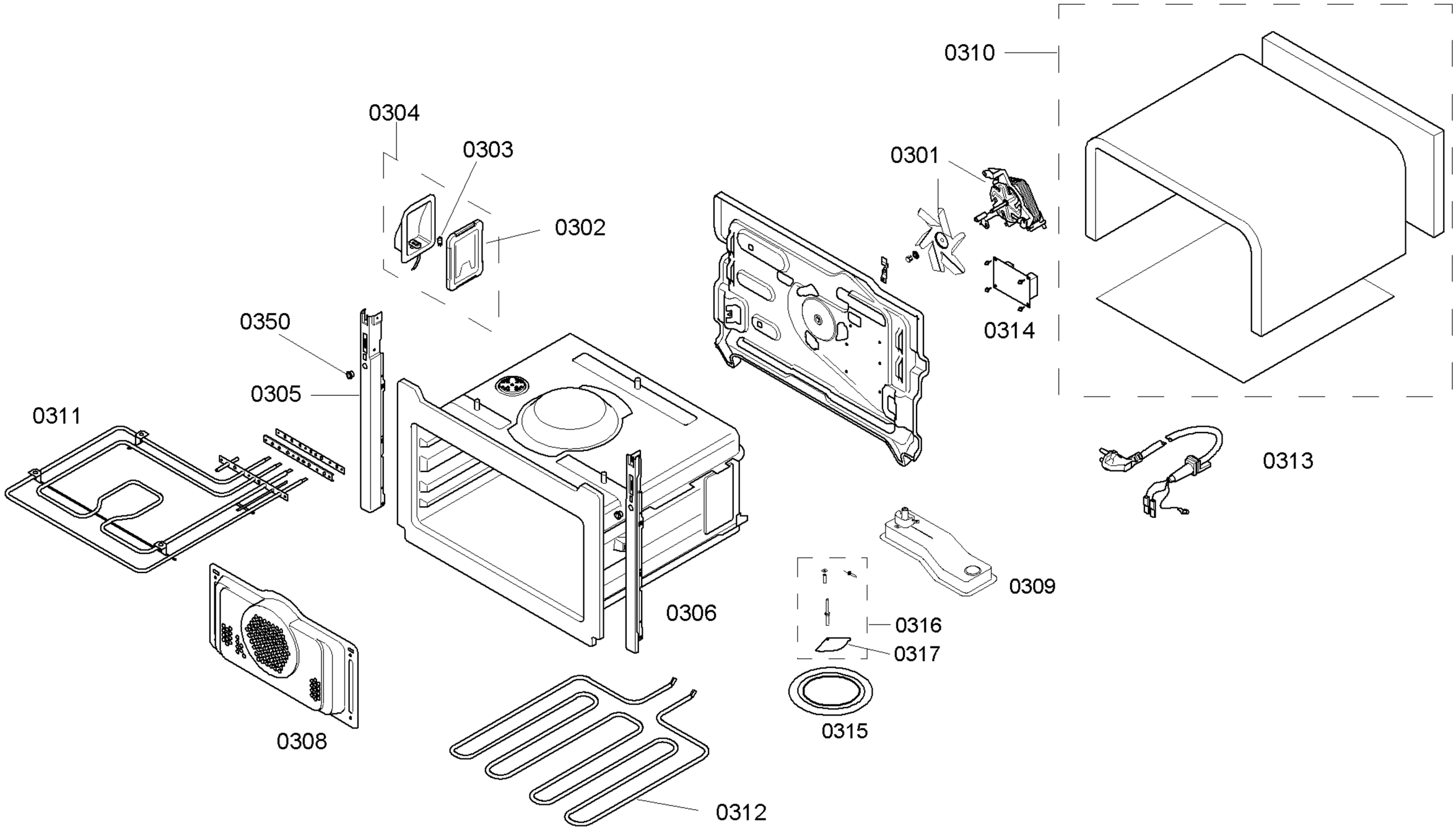

Copyright © (2009) by Siemens / ESHOP_7_2

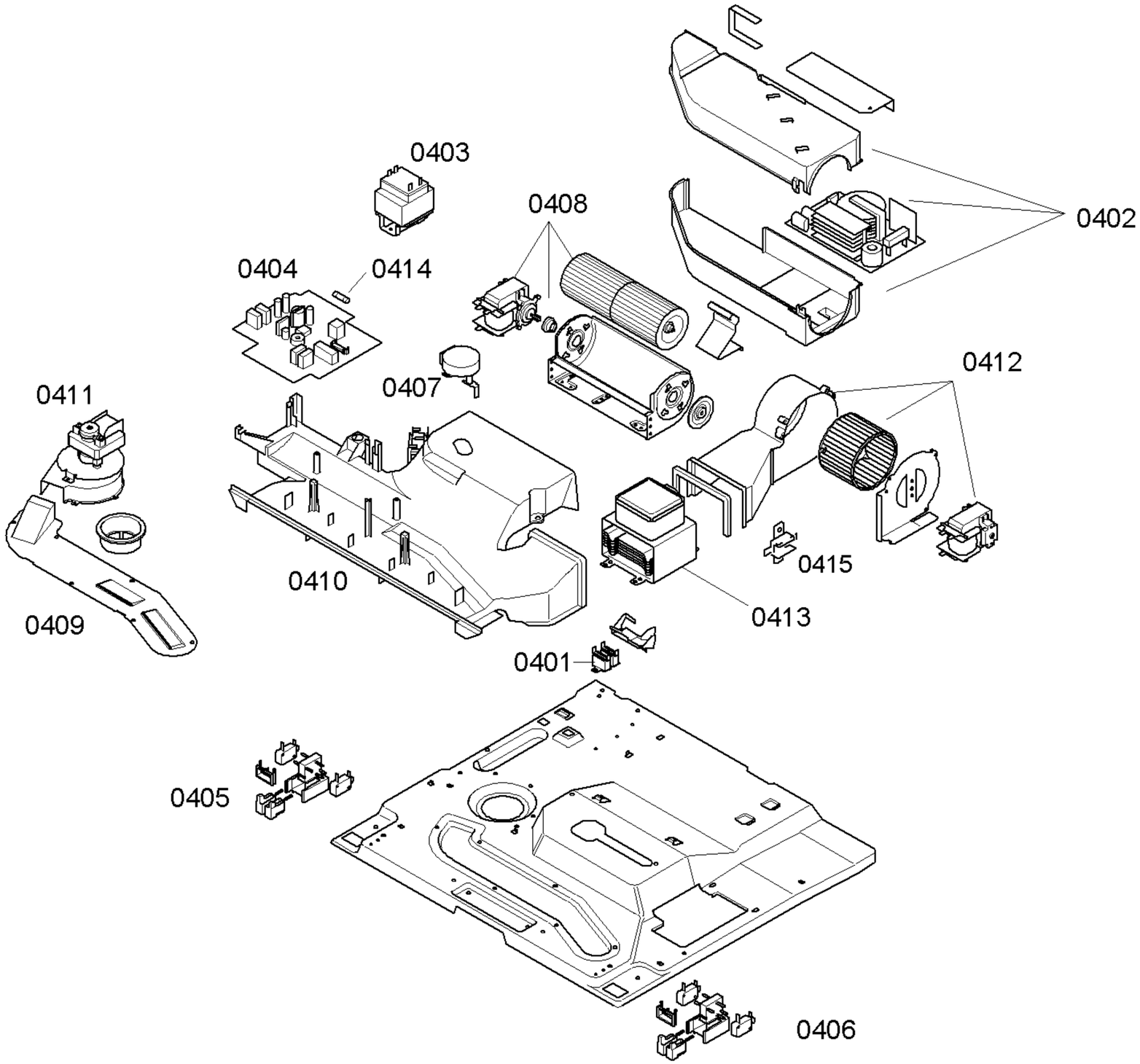

Copyright © (2009) by Siemens / ESHOP_7_2

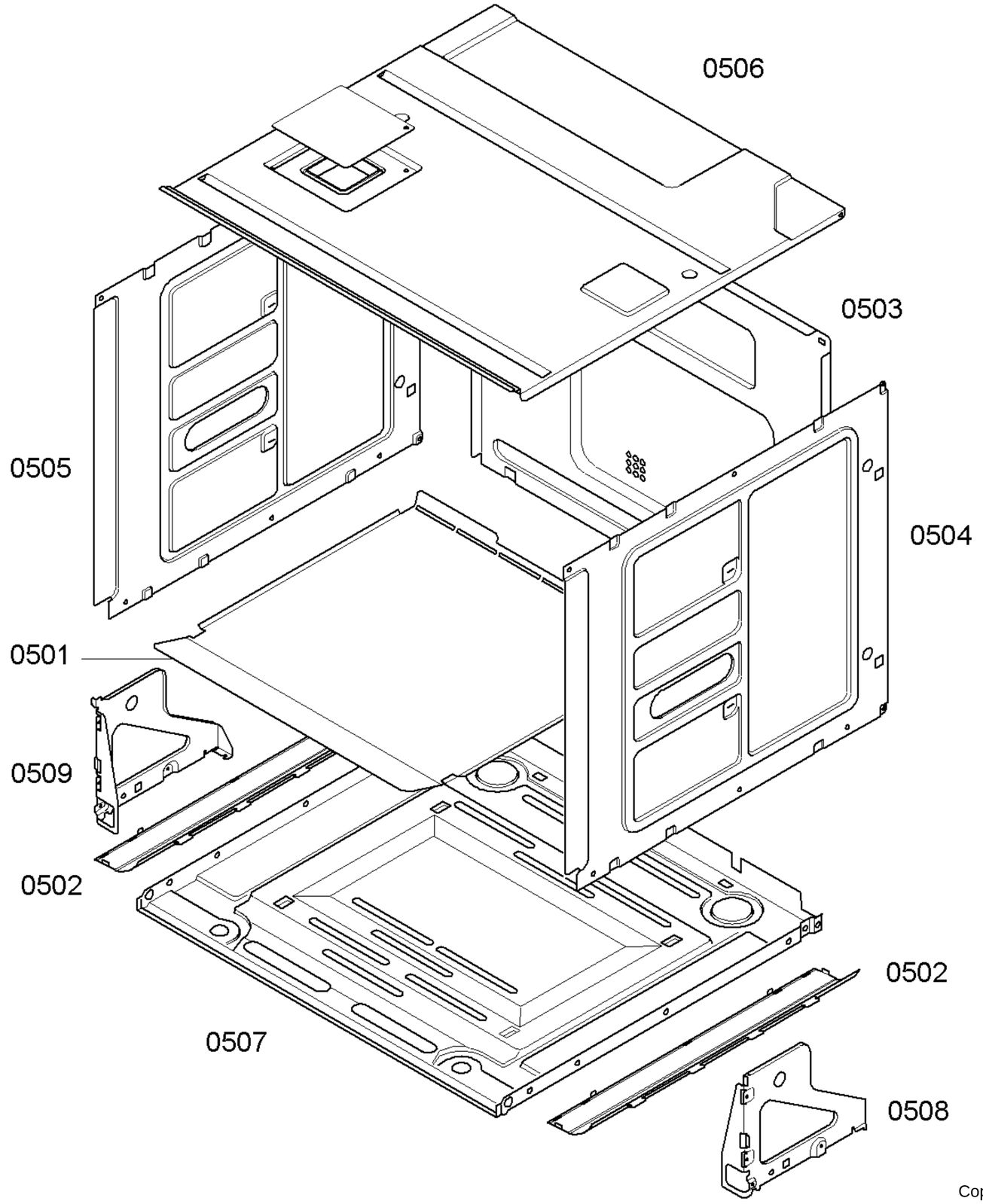

Copyright © (2009) by Siemens / ESHOP_7_2

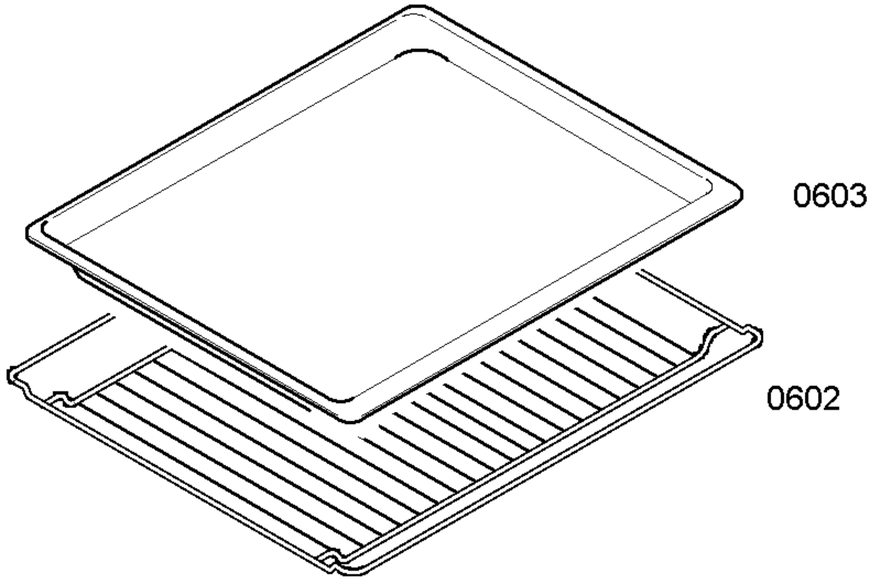

Copyright © (2009) by Siemens / ESHOP_7_2