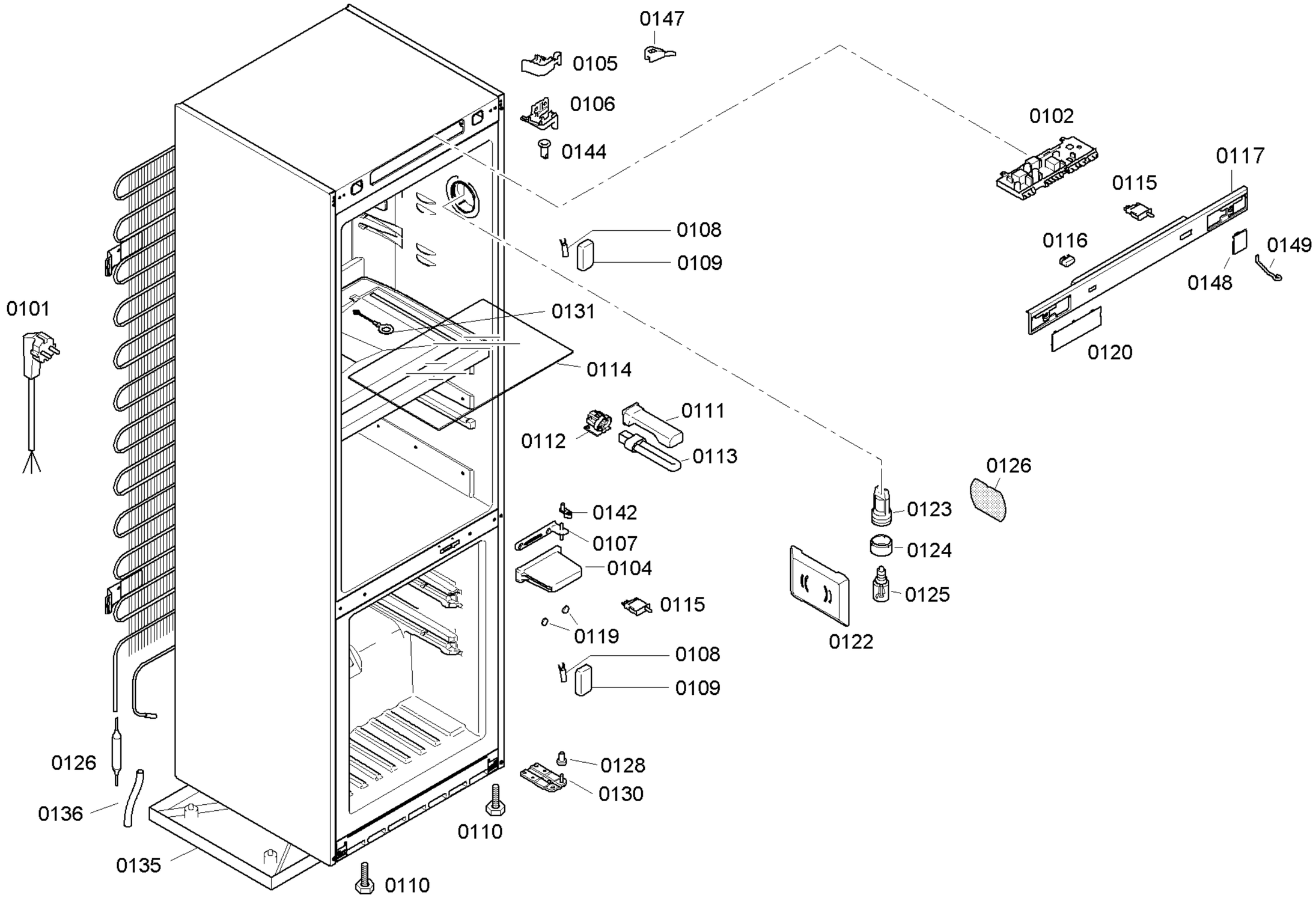




Copyright © ( 2009 ) by Siemens / ESHOP_7_2

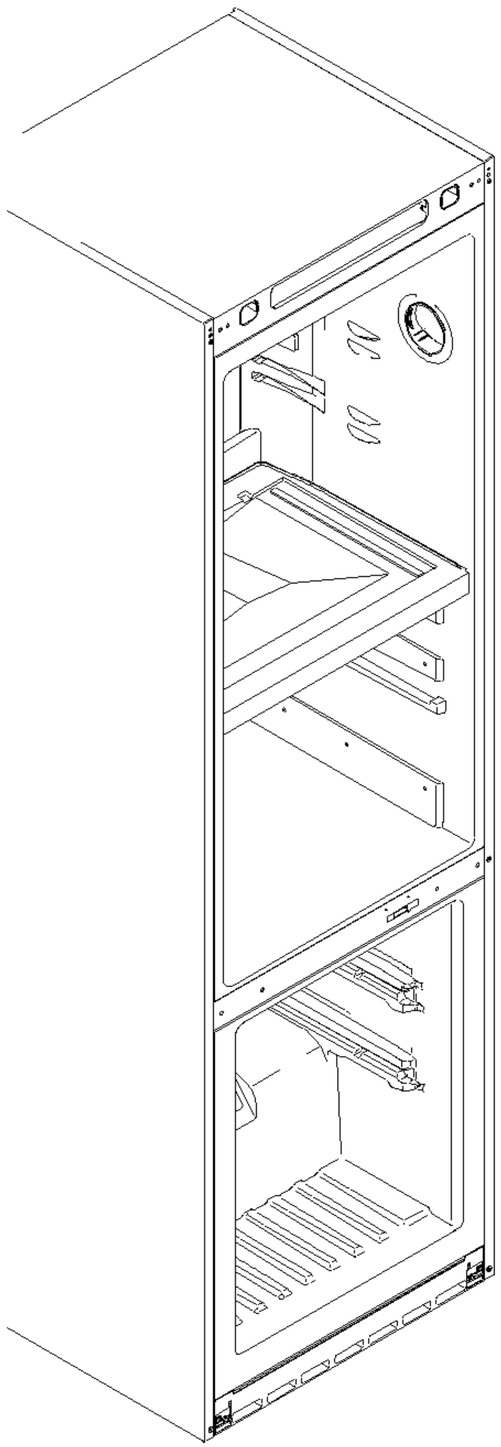

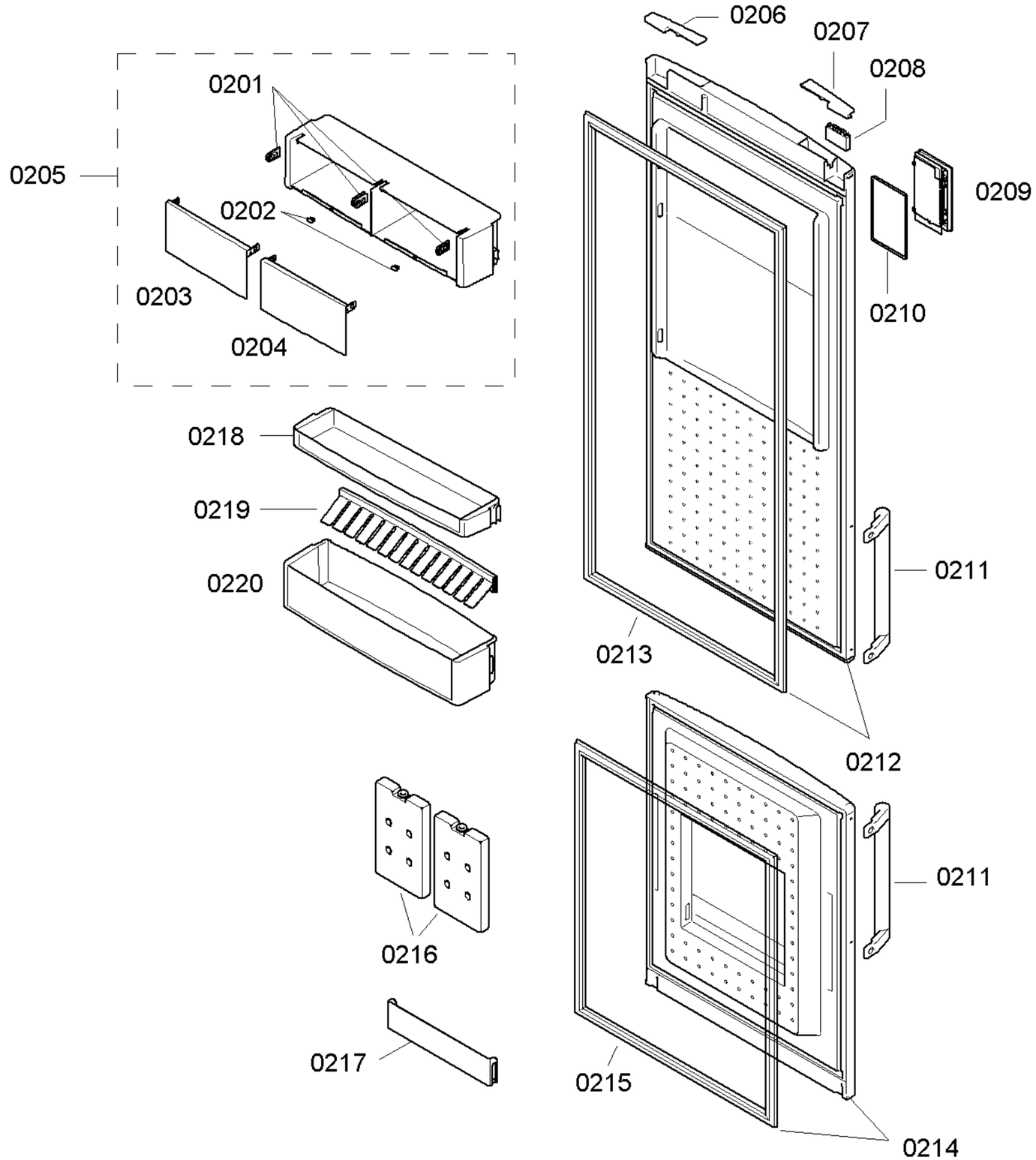




Copyright © ( 2009 ) by Siemens / ESHOP_7_2

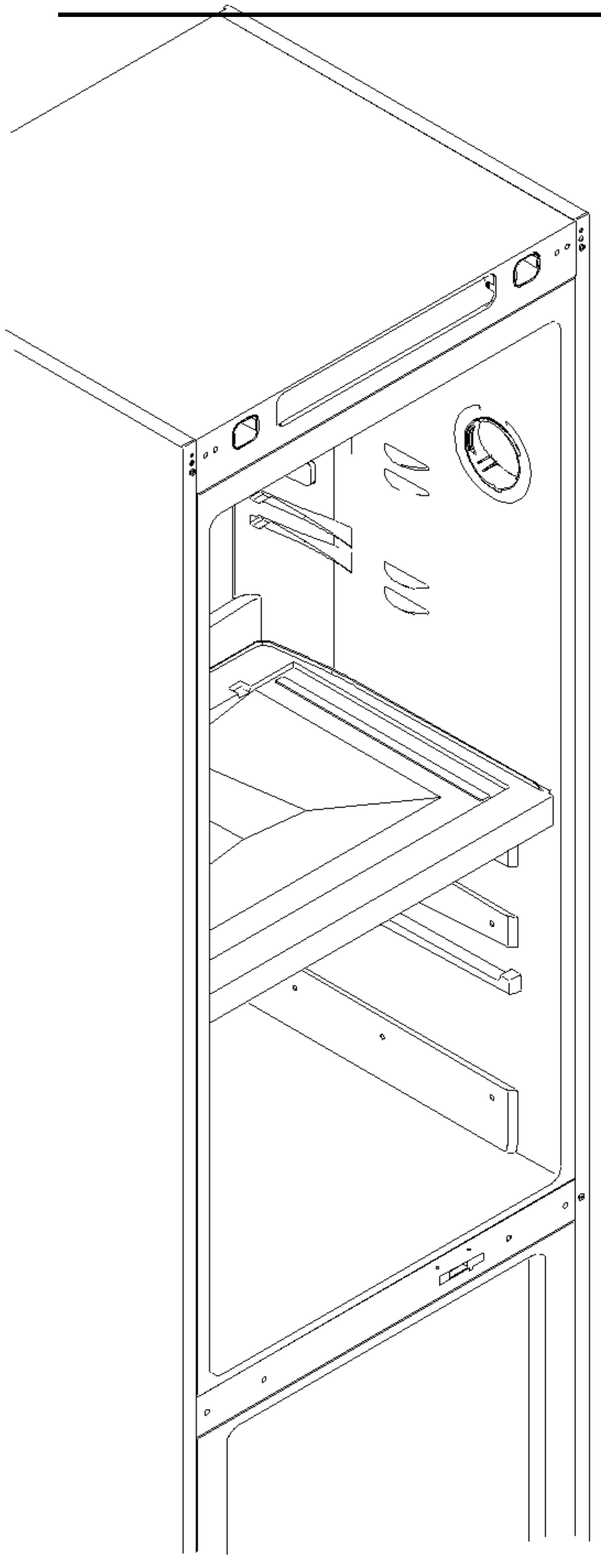

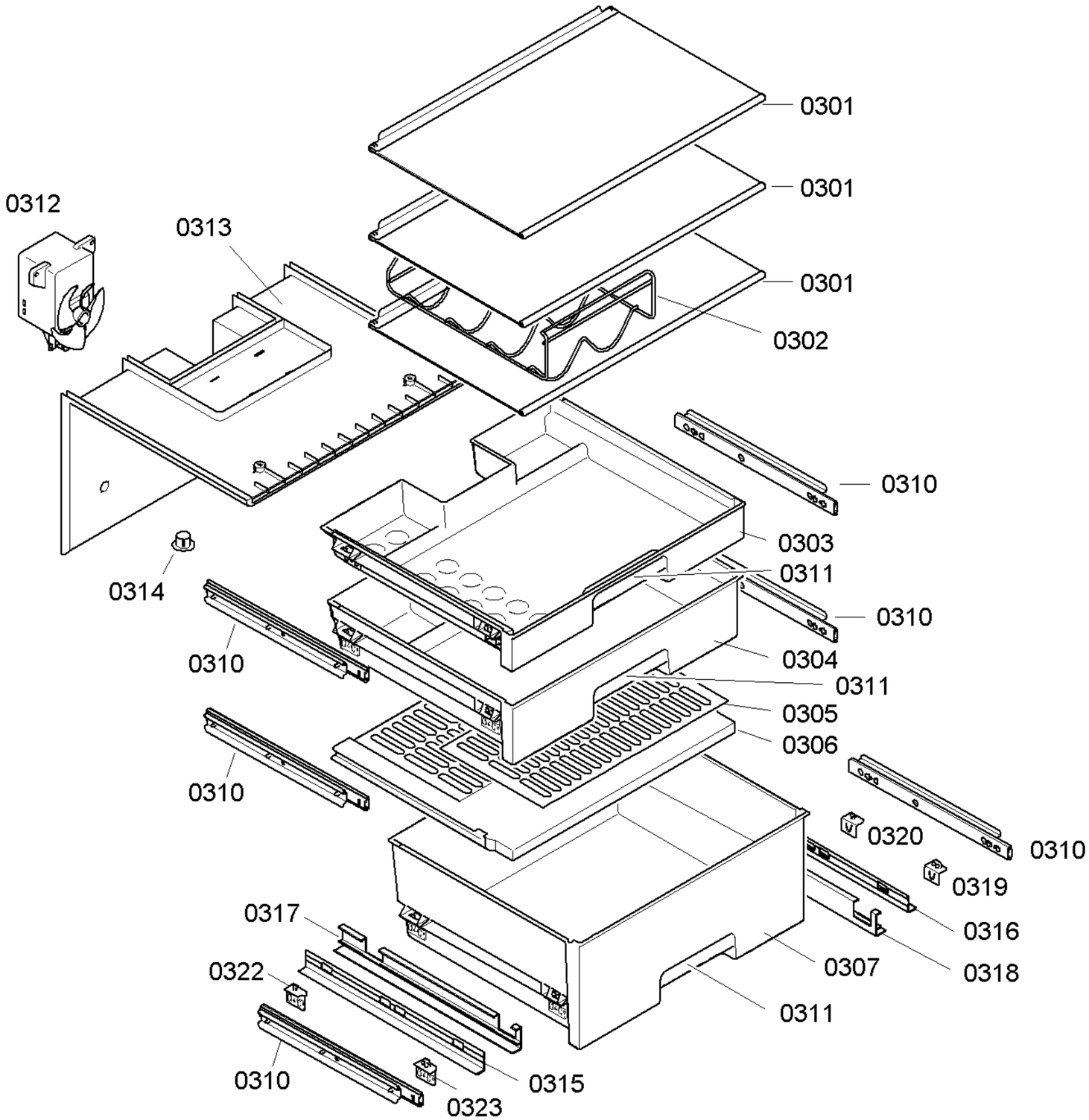




Copyright © ( 2009 ) by Siemens / ESHOP_7_2

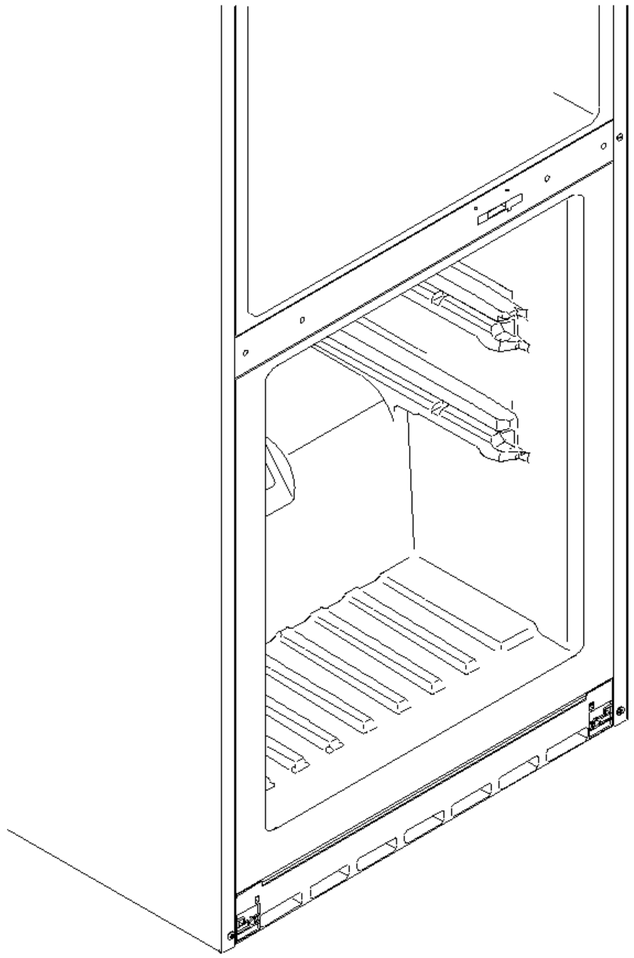

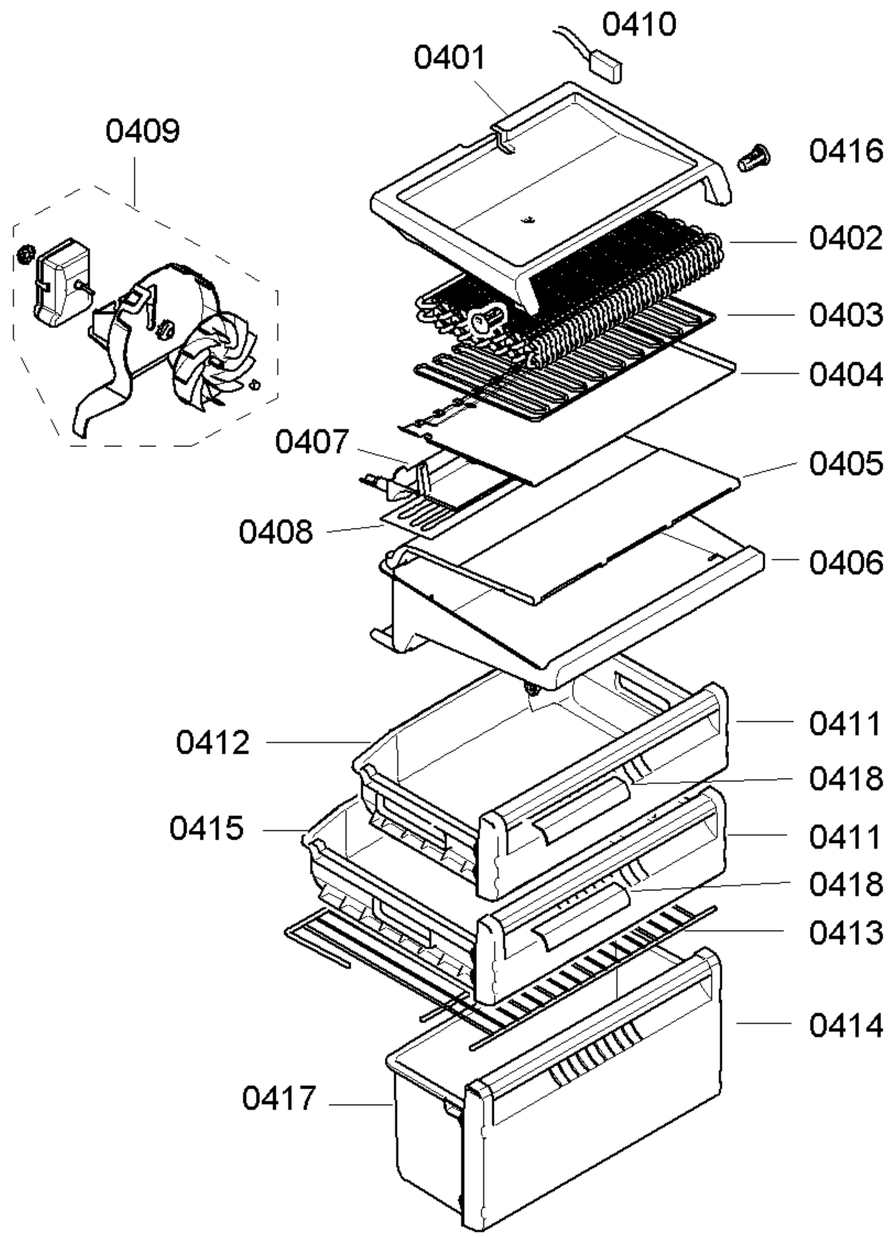

Copyright © ( 2009 ) by Siemens / ESHOP_7_2

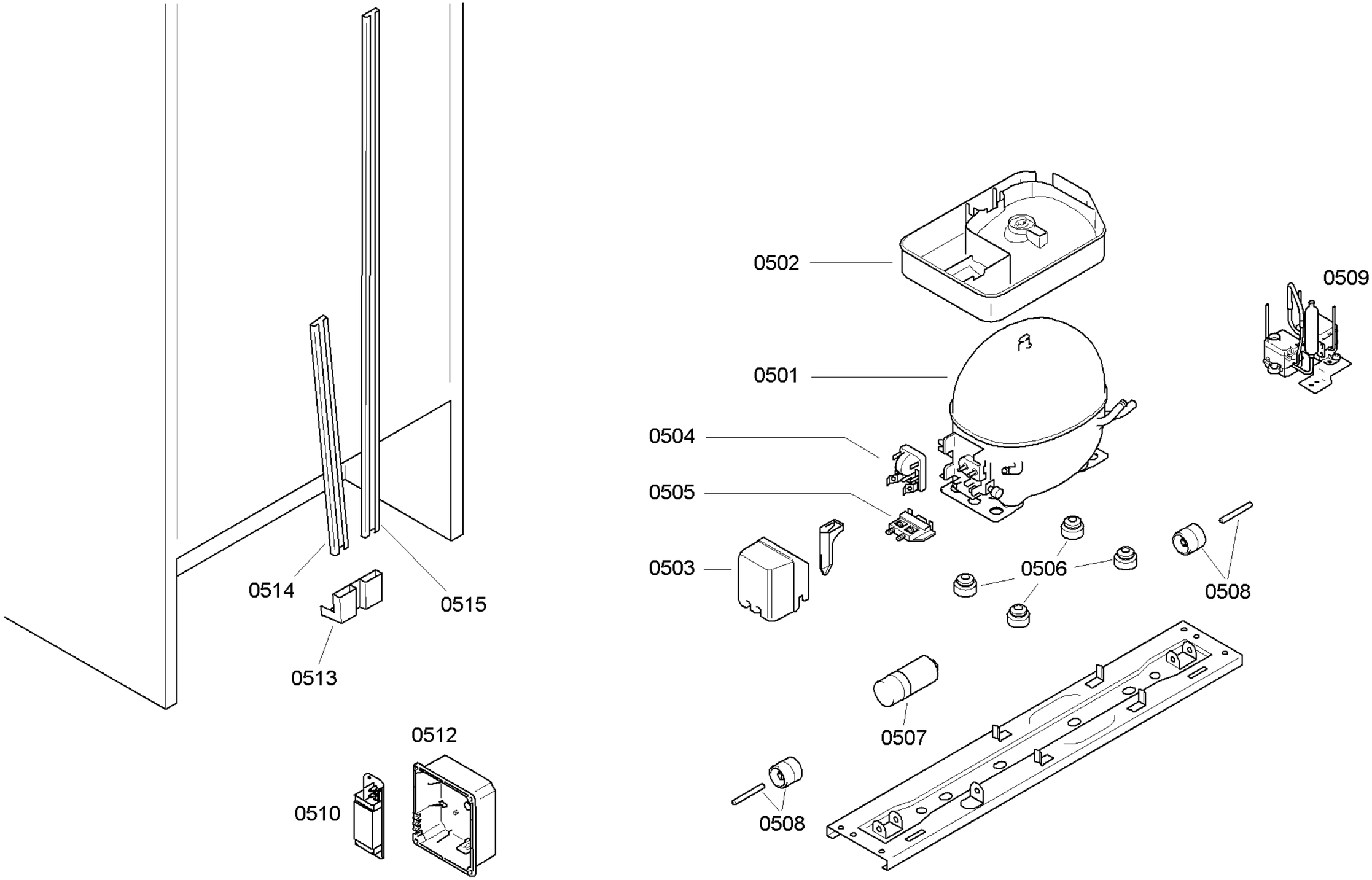




Copyright © ( 2009 ) by Siemens / ESHOP_7_2